OMRON

Open Network Controller

OPERATION MANUAL

ITNC-EIS01
ITNC-EIS01-DRM
ITNC-EIS01-CST
ITNC-EIX01
ITNC-EIX01-DRM
ITNC-EIX01-CST

ITNC-EIS01
ITNC-EIS01-DRM
ITNC-EIS01-CST
ITNC-EIX01
ITNC-EIX01-DRM
ITNC-EIX01-CST
Open Network Controller
Operation Manual

Revised October 2004

Notice:

OMRON products are manufactured for use according to proper procedures by a qualified operator and only for the purposes described in this manual.

The following conventions are used to indicate and classify precautions in this manual. Always heed the information provided with them. Failure to heed precautions can result in injury to people or damage to property.

⚠ DANGER Indicates an imminently hazardous situation which, if not avoided, will result in death or serious injury.

⚠ WARNING Indicates a potentially hazardous situation which, if not avoided, could result in death or serious injury.

⚠ Caution Indicates a potentially hazardous situation which, if not avoided, may result in minor or moderate injury, or property damage.

OMRON Product References

All OMRON products are capitalized in this manual. The word “Unit” is also capitalized when it refers to an OMRON product, regardless of whether or not it appears in the proper name of the product.

The abbreviation “Ch,” which appears in some displays and on some OMRON products, often means “word” and is abbreviated “Wd” in documentation in this sense.

The abbreviation “PLC” means Programmable Controller.

Visual Aids

The following headings appear in the left column of the manual to help you locate different types of information.

Note Indicates information of particular interest for efficient and convenient operation of the product.

1, 2, 3... 1. Indicates lists of one sort or another, such as procedures, checklists, etc.

© OMRON, 1999

All rights reserved. No part of this publication may be reproduced, stored in a retrieval system, or transmitted, in any form, or by any means, mechanical, electronic, photocopying, recording, or otherwise, without the prior written permission of OMRON.

No patent liability is assumed with respect to the use of the information contained herein. Moreover, because OMRON is constantly striving to improve its high-quality products, the information contained in this manual is subject to change without notice. Every precaution has been taken in the preparation of this manual. Nevertheless, OMRON assumes no responsibility for errors or omissions. Neither is any liability assumed for damages resulting from the use of the information contained in this publication.

Unit Versions of Open Network Controllers

Unit Versions

A “unit version” has been introduced to manage Open Network Controllers (ITNC-EIS01, ITNC-EIS01-DRM, ITNC-EIS01-CST, ITNC-EIX01, ITNC-EIX01-DRM, and ITNC-EIX01-CST) according to differences in functionality accompanying product upgrades.

1) Notation of Unit Versions on Products

Products that are being managed using unit versions have the unit version given in the format “Ver. .” on the nameplate. (Refer to the following figure for the position of the nameplate.)

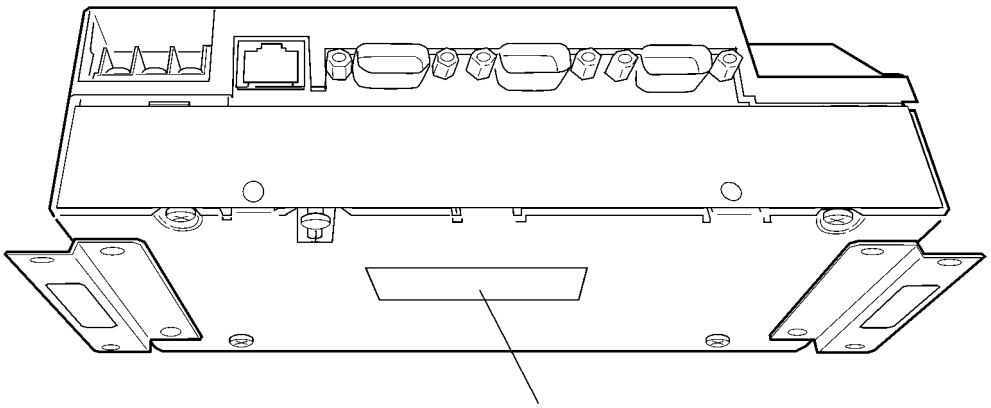

Nameplate

- Unit versions starts from version 1.1. A unit version is not given on the nameplate for products prior to version 1.1.
- Units without a unit version are called “Pre-Ver. 1.1 Units.”

2) Confirming Unit Versions with Web Service Version 2.0

The unit version is given in the *Open Network Controller Version* row the first table displayed for the System Profile display of Web Service Version 2. (Web Service Version 2 must be installed separately.)

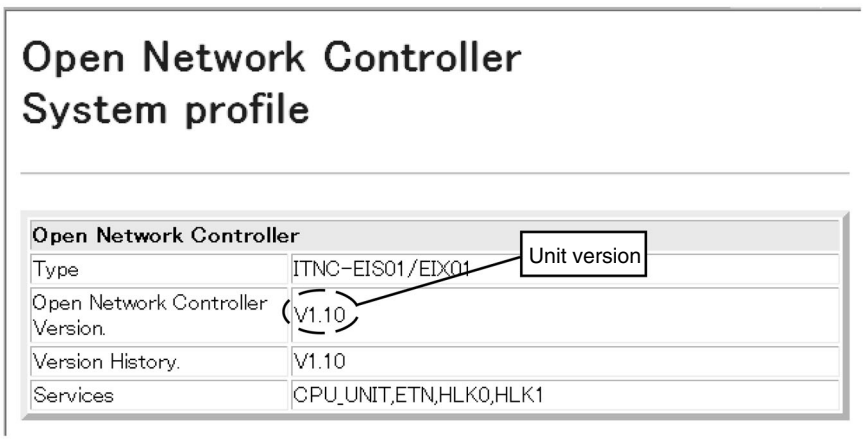

The unit version of Open Network Controllers for which a unit version is not given on the nameplate will be given as V1.00, V1.01, V1.03, or V1.05.

3) Using Unit Version Labels

The unit version labels shown below are included with the product.

Unit Version Notation

The Open Network Controller (ONC) is available in two basic types: ONC Version 1 and ONC Version 2. “ONC Version 1” and “ONC Version 2” are product names, and “Version 1” and “Version 2” in these product names do not refer to the unit version.
This manual uses the notation “Version □.□” to give the unit version to avoid confusion with “Version 1” and “Version 2” in the product names.

Supported Functionality According to Unit Version

Yes: Supported, —: Not supported, Restricted: Limited support

Function	Pre-Ver. 1.1	Unit Ver. 1.1 or later	Reference page
CLOCK WRITE command (07 02)	Executed without stopping OS tick interrupt	Executed with OS tick interrupts prohibited and then enables interrupts	125
TIME COMPENSATION command (07 03)	---	Yes	125
Diskspace utility	---	Yes	235

Changes to QNX Startup File

Part of the /usr/config/sysinit.1 file has been changed in upgrading to unit version 1.1. If you have changed the /usr/config/sysinit.1 file, confirm the effects of the upgrade on your application.A script file called /usr/Tool/bin/onc_command has been provided so that the user can execute application-specific commands during ONC startup. Although previously such commands were directly written to the sysinit.1 file, all user commands should not be placed in the onc_command file.

TABLE OF CONTENTS

PRECAUTIONS xiii

1 Intended Audience xiv
2 General Precautions xiv
3 Safety Precautions xiv
4 Operating Environment Precautions xv
5 Application Precautions xvi
6 Conformance to EC Directives xvii

SECTION 1
Introduction 1

1-1 Overview 2
1-2 Components 3
1-3 Basic Application Procedure 7

SECTION 2
Functions 9

2-1 System Configuration 10
2-2 CPU_UNIT Functions 11
2-3 NP Functions and Precautions 12

SECTION 3
Hardware 21

3-1 Nomenclature and Functions 22
3-2 DIP Switch Settings 26
3-3 Mounting Expansion Boards 28
3-4 Installing the Open Network Controller 31
3-5 Connecting the Power Supply Cable 39
3-6 Connecting COM Port Cables 41
3-7 Connecting DeviceNet Cables 46
3-8 Connecting Ethernet Cables 52
3-9 Handling Memory Cards 53

SECTION 4
Software Settings 59

4-1 Overview 60
4-2 Logging onto the Open Network Controller 61
4-3 Using the ONC_wizard Setting Tool 66
4-4 Making Settings with a vi Editor 82
4-5 Transferring Settings Files with FTP 82
4-6 Setting File Descriptions 83
4-7 Setting Examples 102

SECTION 5
FINS Commands 115

5-1 Overview 117
5-2 FINS Commands Addressed to CPU_Unit 117
5-3 FINS Commands Addressed to ETN_UNIT 128
5-4 FINS Commands Addressed to HLK_UNIT 131
5-5 FINS Commands Addressed to DRM_UNIT 158
5-6 FINS Commands Addressed to CLK_UNIT 162
5-7 FINS Commands Addressed to SYSMAC_UNIT 162
5-8 End Codes 171

TABLE OF CONTENTS

SECTION 6
ITNC-EIS01-CST and ITNC-EIX01-CST (CS1 Bus Interface) 179

6-1 Introduction 180
6-2 Functions 181
6-3 Hardware Settings 184
6-4 Software Settings 187
6-5 FINS Commands 191

SECTION 7
Troubleshooting 195

7-1 Seven-segment Display and syslog Error Messages 196
7-2 DeviceNet Indicator Displays 211
7-3 Error Messages with the ITNC-EIS01-CST or ITNC-EIX01-CST 216

Appendices

A Specifications 225
B Connector Signal Arrangements 227
C Replacing the Backup Battery 229
D PT Connection Service 231
E Diskspace Utility (Unit Version 1.1 or later) 235

Index 237

Revision History 241

About this Manual:

This manual describes the installation and operation of the Open Network Controllers and includes the sections described below. The Open Network Controllers provide an FINS gateway function that enables connecting personal computers on an Ethernet network to OMRON PLCs, OMRON components, and DeviceNet-compatible devices.

Please read this manual and all related manuals carefully and be sure you understand the information provided before attempting to install and operate an Open Network Controller.

The following manuals provide information on related products.

Product model numbers	Manual	Catalog number (suffixes omitted)
C200PC-ISA01-DRM-E	SYSMAC Board Operation Manual	W326
C200PC-ISA01-E/ISA□2-DRM-E C200PC-ISA□2-SRM-E C200PC-EXP01	SYSMAC Board Operation Manual	V201
SYSMAC 3G8F5-CLK21-E	Controller Link Support Board Operation Manual	W307

Section 1 provides an overview of the Open Network Controllers, including their components and a basic application procedure.

Section 2 outlines the functions of the Open Network Controllers.

Section 3 provides information on the hardware components, installation, and settings of the Open Network Controller.

Section 4 describes the various methods that can be used to set the contents of the environment settings files for the Open Network Controller.

Section 5 individually describes the FINS commands and responses for CPU_UNIT and the network providers (NPs). Refer to the the FINS Commands Reference Manual (W227) for further information on FINS commands.

Section 6 describes the ITNC-EIS01-CST and ITNC-EIX01-CST Open Network Controllers.

Section 7 describes the use of the 7-segment display, syslog error log file, and DeviceNet indicators to troubleshoot error that can occur on the Open Network Controller.

The ***Appendices*** provide a list of specifications, connector signal layouts, the battery replacement procedure, and information on the Programmable Terminal (PT) connection service

⚠WARNING Failure to read and understand the information provided in this manual may result in personal injury or death, damage to the product, or product failure. Please read each section in its entirety and be sure you understand the information provided in the section and related sections before attempting any of the procedures or operations given.

PRECAUTIONS

This section provides general precautions for using the Open Network Controller and related devices.

The information contained in this section is important for the safe and reliable application of the Open Network Controllers. You must read this section and understand the information contained before attempting to set up or operate an Open Network Controller.

1 Intended Audience xiv
2 General Precautions xiv
3 Safety Precautions xiv
4 Operating Environment Precautions xv
5 Application Precautions xvi
6 Conformance to EC Directives xvii

1 Intended Audience

This manual is intended for the following personnel, who must also have knowledge of electrical systems (an electrical engineer or the equivalent).

- Personnel in charge of installing FA systems.
- Personnel in charge of designing FA systems.
- Personnel in charge of managing FA systems and facilities.
- Personnel with an understanding of TCP/IP applications technology.

2 General Precautions

The user must operate the Open Network Controller according to the performance specifications described in the operation manuals.

Before using an Open Network Controller under conditions which are not described in the manual or applying an Open Network Controller to nuclear control systems, railroad systems, aviation systems, vehicles, combustion systems, medical equipment, amusement machines, safety equipment, and other systems, machines, and equipment that may have a serious influence on lives and property if used improperly, consult your OMRON representative.

Make sure that the ratings and performance characteristics of the Open Network Controller are sufficient for the systems, machines, and equipment, and be sure to provide the systems, machines, and equipment with double safety mechanisms.

This manual provides information for programming and operating the Open Network Controller. Be sure to read this manual before attempting to use an Open Network Controller and keep this manual close at hand for reference during operation.

⚠ WARNING It is extremely important that an Open Network Controller be used for the specified purpose and under the specified conditions, especially in applications that can directly or indirectly affect human life. You must consult with your OMRON representative before applying an Open Network Controller System to the above-mentioned applications.

3 Safety Precautions

⚠ WARNING Do not attempt to take an Open Network Controller apart while the power is being supplied. Doing so may result in electric shock.

⚠ WARNING Do not touch any of the terminals while the power is being supplied. Doing so may result in electric shock.

⚠ WARNING Do not short the battery terminals or charge, disassemble, apply pressure to, heat, or incinerate the battery. Do not subject the battery to strong shocks. Doing any of these may result in leakage, rupture, heat generation, or ignition of the battery. Batteries that have been subjected to shock may leak if they are used.

⚠ WARNING Fail-safe measures must be taken by the customer to ensure safety in the event of incorrect, missing, or abnormal signals caused by broken signal lines, momentary power interruptions, or other causes.

⚠ WARNING Interlock circuits, limit circuits, and similar safety measures in external circuits (i.e., not in the Open Network Controller or a Programmable Controller) must be provided by the customer.

⚠ Caution Execute online edit only after confirming that no adverse effects will be caused by extending the cycle time. Otherwise, the input signals may not be readable.

⚠ Caution Confirm safety at the destination node before transferring a program to another node or changing contents of the I/O memory area. Doing either of these without confirming safety may result in injury.

⚠ Caution Tighten the terminal screws on the power supply to the torque specified in the operation manual. The loose screws may result in burning or malfunction.

⚠ Caution Always turn OFF the power supply to the Open Network Controller before attempting any of the following. Not turning OFF the power supply may result in malfunction or electric shock.

- Setting DIP switches or rotary switches.
- Replacing the battery.
- Performing any other operation that requires touching the controls of the Open Network Controller.

4 Operating Environment Precautions

⚠ Caution Do not operate the control system in the following locations:

- Locations subject to direct sunlight.
- Locations subject to temperatures or humidity outside the range specified in the specifications.
- Locations subject to condensation as the result of severe changes in temperature.
- Locations subject to corrosive or flammable gases.
- Locations subject to dust (especially iron dust) or salts.
- Locations subject to exposure to water, oil, or chemicals.
- Locations subject to shock or vibration.

⚠ Caution Install the Open Network Controllers properly as specified in the operation manuals. Improper installation of the Open Network Controllers may result in malfunction.

⚠ Caution Take appropriate and sufficient countermeasures when installing systems in the following locations:

- Locations subject to static electricity or other forms of noise.
- Locations subject to strong electromagnetic fields.
- Locations subject to possible exposure to radioactivity.
- Locations close to power supplies.

⚠ Caution The operating environment of the Open Network Controller System will have a large effect on the longevity and reliability of the system. Improper operating environments can lead to malfunction, failure, and other unforeseeable problems with the Open Network Controller System. Be sure that the operating environment is within the specified conditions at installation and remains within the specified conditions during the life of the system.

5 Application Precautions

Observe the following precautions when using the Open Network Controller System.

- Always use the power supply voltages specified in the operation manuals. An incorrect voltage may result in malfunction or burning.
- Take appropriate measures to ensure that the specified power with the rated voltage and frequency is supplied. Be particularly careful in places where the power supply is unstable. An incorrect power supply may result in malfunction.
- Install external breakers and take other safety measures against short-circuiting in external wiring. Insufficient safety measures against short-circuiting may result in burning.
- Do not apply voltages to the Input Units in excess of the rated input voltage. Excess voltages may result in burning.
- Do not apply voltages or connect loads to the Output Units in excess of the maximum switching capacity. Excess voltage or loads may result in burning.
- Disconnect the functional ground terminal when performing withstand voltage tests. Not disconnecting the functional ground terminal may result in burning.
- Always connect to a ground of 100 Ω or less when installing the Open Network Controllers. Not connecting to a ground of 100 Ω or less may result in electric shock.
- A ground of 100 Ω or less must be installed when shorting the GR and LG terminals on the Power Supply Open Network Controller.
- Always turn OFF the power supply to the Open Network Controller and the PLC before attempting any of the following. Not turning OFF the power supply may result in malfunction or electric shock.
  - Mounting or dismounting I/O Units or any other Units.
  - Assembling the Units.
  - Setting DIP switches or rotary switches.
  - Connecting cables or wiring the system.
  - Connecting or disconnecting the connectors.
- Do not attempt to disassemble, repair, or modify any Units.
- The mounting screws, terminal screws, and cable connector screws must be tightened to the torque specified in the relevant manuals on both the Open Network Controller and the PLC. Incorrect tightening torque may result in malfunction.
- Do not allow foreign matter to enter the Open Network Controller when wiring.
- Leave the label attached to the I/O Units when wiring. Removing the label may result in malfunction if foreign matter enters the Unit.
- Remove the label after the completion of wiring to ensure proper heat dissipation. Leaving the label attached may result in malfunction.
- Use crimp terminals for wiring. Do not connect bare stranded wires directly to terminals. Connection of bare stranded wires may result in burning.
- Wire all connections correctly.
- Double-check all wiring and switch settings before turning ON the power supply. Incorrect wiring may result in burning.
- Mount I/O Units only after checking terminal blocks and connectors completely.
- Be sure that the terminal blocks, Memory Units, expansion cables, and other items with locking devices are properly locked into place. Improper locking may result in malfunction.
- Check the user program for proper execution before actually executing it. Not checking the program may result in unexpected operation.

- Confirm that no adverse effect will occur in the system before attempting any of the following. Not doing so may result in an unexpected operation.
  - Changing the operating mode of the PLC.
  - Force-setting/force-resetting any bit in memory.
  - Changing the present value of any word or any set value in memory.
- Resume operation only after transferring to the new CPU Unit or Open Network Controller the contents of the DM Area, HR Area, and other data required for resuming operation. Not doing so may result in an unexpected operation. Do not turn OFF the power supply while data is being written to the internal flash disk. Doing so may damage the file being written.
- Also, do not turn OFF the power supply or remove the Memory Card when the Card is being accessed. Data files may be lost.
- Maintain the operating environment for the Memory Cards (such as the ambient operating temperature and other conditions). Request operating environment conditions from the manufacture of the Card.
- We recommend making a backup of the internal disk to prevent losing the data inadvertently, e.g., by mistakenly deleting it.
- The PC will not start operation even after the power supply is turned ON until the CS1 Bus Interface in the Open Network Controller completes initialization. The Open Network Controller requires approximately 40 seconds to start operation after the power supply is turned ON. You must design the system to allow for this delay.
- Also, if the power supply to the Open Network Controller is interrupted during operation, the PC will detect an I/O bus error. You must design the system to allow for this possibility.
- Do not short the battery terminals or charge, disassemble, heat, or incinerate the battery. Do not subject the battery to strong shocks. Doing any of these may result in leakage, rupture, heat generation, or ignition of the battery. Dispose of any battery that has been dropped on the floor or otherwise subjected to excessive shock. Batteries that have been subjected to shock may leak if they are used.
- UL standards require that batteries be replaced only by experienced technicians. Do not allow unqualified persons to replace batteries.

6 Conformance to EC Directives

The Open Network Controllers comply with EC Directives. To ensure that the machine or device in which an Open Network Controller is used complies with EC directives, the Open Network Controller must be installed as follows:

1, 2, 3...

1. The Open Network Controller must be installed within a control panel.
2. Reinforced insulation or double insulation must be used for the DC power supplies used for the communications and I/O power supplies.
3. The Open Network Controllers also conform to the Common Emission Standard (EN50081-2). When an Open Network Controller is built into a machine, however, the structure of the control panel, the relationships to other connected devices, wiring, and other variables can cause the overall machine to fail to meet the Standards. It is the responsibility of the final manufacturer to confirm that EC Directives have been met.

   The following are examples of countermeasures that can be taken to reduce noise.

1, 2, 3...

1. Place ferrite cores must on the communications cables to reduce noise given off by the cables.
2. Use power cables that are as thick and as short as possible in the control panel and ground properly to 100 Ω or less.

3. Use power cables that are as thick and as short as possible for DeviceNet communications cables and ground them properly to 100 Ω or less.

SECTION 1
Introduction

This section provides an overview of the Open Network Controllers, including their components and a basic application procedure.

1-1 Overview 2
1-2 Components 3
1-3 Basic Application Procedure 7

1-1 Overview

An Open Network Controller provides a gateway for FINS message communications among the following devices:

- Personal computers, PLCs, or other nodes on an Ethernet network.
- PLCs or other nodes on a Controller Link, Host Link, or SYSMAC I/O bus network.
- OMRON FA components on a CompoWay/F network.
- Devices from OMRON or other manufacturers on a DeviceNet network.

The following diagram illustrates the devices that can communicate through an Open Network Controller.

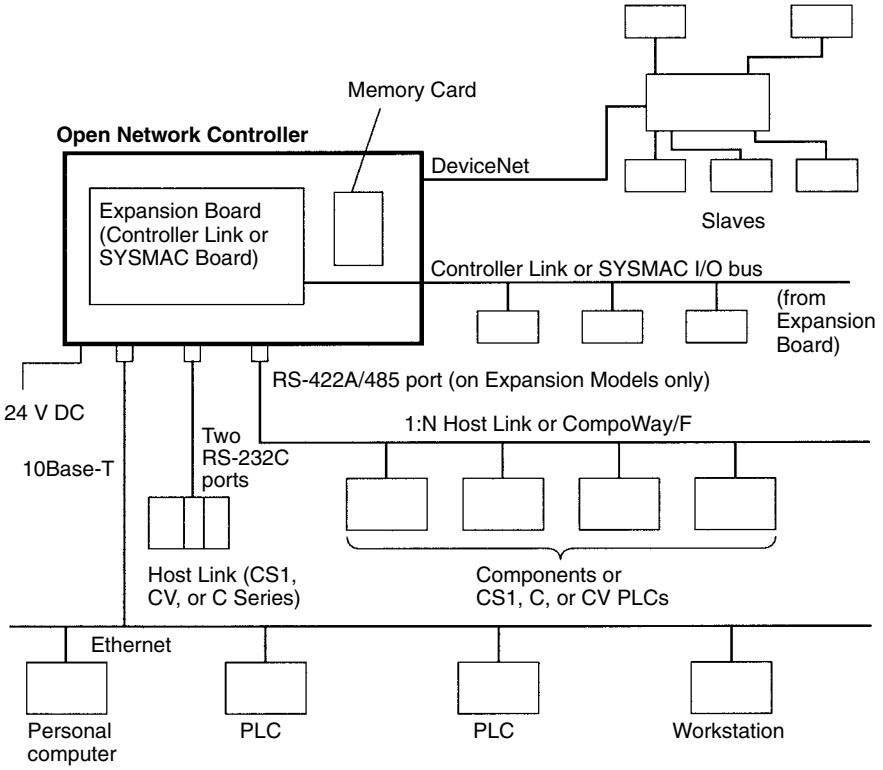

An Open Network Controller provides the following features.

- The Open Network Controller is smaller and more resistant to environmental conditions than personal or factory computers, allowing for a wider range of installation sites.
- A real-time OS supports a multitasking network environment.
- A 10Base-T Ethernet port is provided on all models.
- The Open Network Controller converts FINS commands from personal computers, PLCs, or other nodes on an Ethernet network to Host Link commands, enabling FINS communications with PLCs that do not support FINS commands directly.
- The Open Network Controller converts FINS commands from personal computers, PLCs, or other nodes on an Ethernet network to CompoWay/F commands, enabling FINS communications with CompoWay/F devices.
- The Open Network Controller converts FINS commands from personal computers, PLCs, or other nodes on an Ethernet network to explicit messages for DeviceNet-compatible devices manufactured by OMRON and by other companies (supported by ITNC-EIS01-DRM and ITNC-EIX01-DRM Models only).

1-2 Components

This section describes the components of an Open Network Controller. The following table lists the main components.

Model	Description	Specifications
ITNC-EIS01	Standard Model	No expansion slots Two COM ports (RS-232C)
ITNC-EIS01-DRM	Standard Model with DeviceNet	No expansion slots Two COM ports (RS-232C) DeviceNet interface
ITNC-EIX01	Expansion Model	Expansion slot (see note 1) Three COM ports (two RS-232C and one RS-422)
ITNC-EIX01-DRM	Expansion Model with DeviceNet	Expansion slot (see note 1) Three COM ports (two RS-232C and one RS-422) DeviceNet interface
ITNC-EIS01-CST (See note 2.)	Standard Model with CS1 Bus Interface	Expansion slot (see note 1) Two COM ports (CS1 bus interface)
ITNC-EIX01-CST (See note 2.)	Expansion Model with CS1 Bus Interface	Expansion slot (see note 1) Three COM ports (CS1 bus interface)
ITNC-AP001	Standard Model Mounting Bracket	---
ITNC-AP002	Expansion Model Mounting Bracket	---
ITNC-DIN01	DIN Track Mounting Bracket	---

Note

1. The expansion slot is an ISA bus slot into which either a Controller Link Board or a SYSMAC Board can be mounted. Only one slot is provided.
2. Refer to *Section 6 ITNC-EIS01-CST and ITNC-EIX01-CST* for information on the ITNC-EIS01-CST and ITNC-EIX01-CST.

Each model is described next. Open the packing boxes and make sure you have the correct models.

Reference Manuals

Model	Name	Cat. No.
ITNC-MD1Q-EF	Open Network Controller Connection Units for Non-OMRON PLCs (Mitsubishi A-series Computer Link Module) Operation Manual	V209-E1
---	HLK_UNIT Serial Network Provider (for ID Controllers and Productivity Monitors) Release Notes	---
---	SYSMAC LINK Connection Unit Release Notes	---
---	Open Network Controller ONC Java Applet Setting Tool Operation Manual	---
ITNC-RK1Q-ECD	Open Network Controller RemoteKit Software Operation Manual	V221-E1
ITNC-DK1Q-ECD	Open Network Controller Database Software Operation Manual	V223-E1
ITNC-DL1Q-ECD-V2	Open Network Controller Data Collection/Distribution Service Software Version 2 Operation Manual	V225-E1
---	Open Network Controller Web Service Software Version 2 Operation Manual	---
---	FinsLink Release Notes	---

Note Refer to the following Web site for the most recent information on Open Network Controllers.
http://www.plcsoft.ne.jp/it/onc/english/index.html

ITNC-EIS01 Standard Model

The ITNC-EIS01 Standard Model is shown below. Use the illustration to confirm you have the correct model.

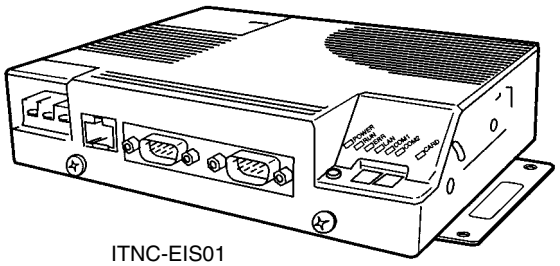

ITNC-EIS01
Standard Model

Safety Precautions

Safety Precautions

ITNC-EIS01-DRM Standard Model with DeviceNet

The ITNC-EIS01-DRM Standard Model with DeviceNet is shown below. Use the illustration to confirm you have the correct model.

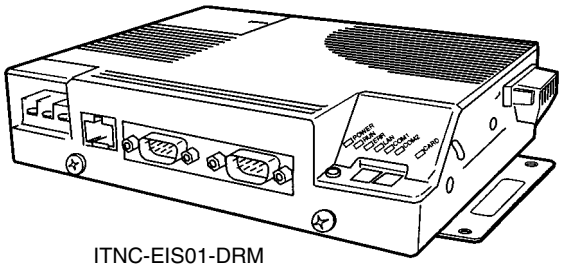

ITNC-EIS01-DRM
Standard Model with DeviceNet

Safety Precautions

Safety Precautions

ITNC-EIX01 Expansion Model

The ITNC-EIX01 Expansion Model is shown below. Use the illustration to confirm you have the correct model.

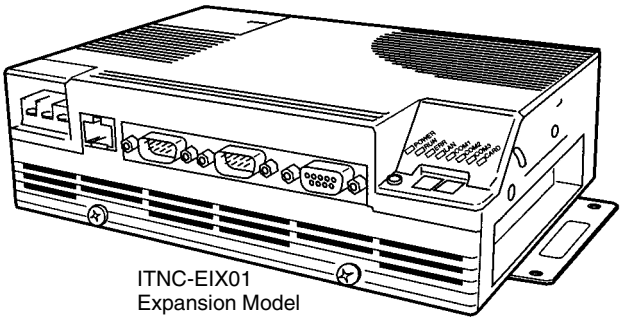

ITNC-EIX01
Expansion Model

Safety Precautions

ITNC-EIX01-DRM Expansion Model with DeviceNet

The ITNC-EIX01-DRM Expansion Model with DeviceNet is shown below. Use the illustration to confirm you have the correct model.

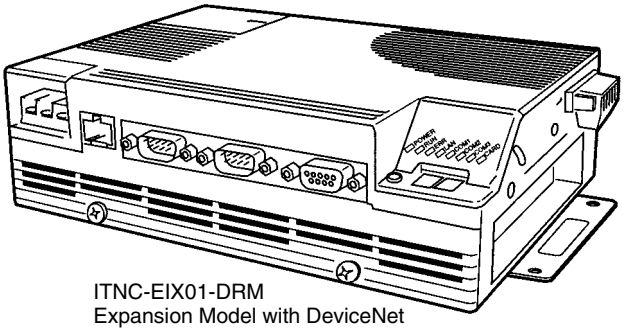

ITNC-EIX01-DRM
Expansion Model with DeviceNet

Safety Precautions

ITNC-AP001 Standard Model Mounting Bracket

The ITNC-AP001 Standard Model Mounting Bracket is shown below. Use the illustration to confirm you have the correct model.

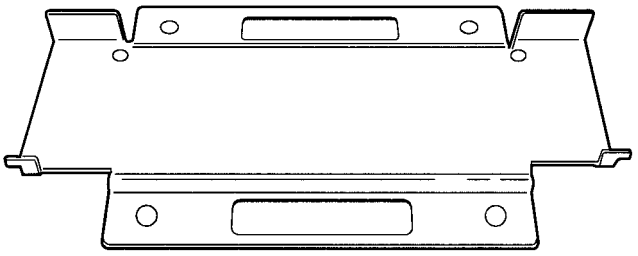

ITNC-AP001
Standard Model Mounting Bracket

- The ITNC-AP001 is used to mount a Standard Model Open Network Controller vertically.
- The ITNC-DIN01 DIN Track Mounting Bracket can also be used together with DIN Track to mount vertically.
- Refer to *3-4 Installing the Open Network Controller* for installation methods.

ITNC-AP002 Expansion Model Mounting Bracket

The ITNC-AP002 Expansion Model Mounting Bracket is shown below. Use the illustration to confirm you have the correct model.

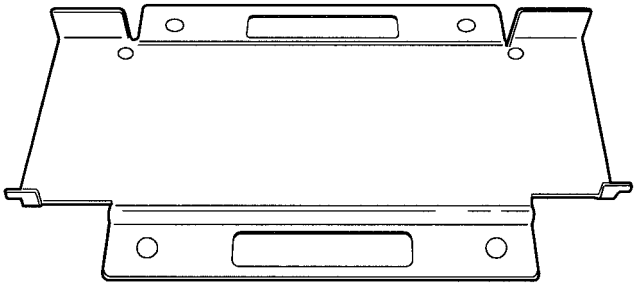

ITNC-AP002
Expansion Model Mounting Bracket

- The ITNC-AP002 is used to mount an Expansion Model Open Network Controller vertically.
- The ITNC-DIN01 DIN Track Mounting Bracket can also be used together with DIN Track to mount vertically.
- Refer to *3-4 Installing the Open Network Controller* for installation methods.

ITNC-DIN01 DIN Track Mounting Bracket

The ITNC-DIN01DIN Track Mounting Bracket is shown below. Use the illustration to confirm you have the correct model.

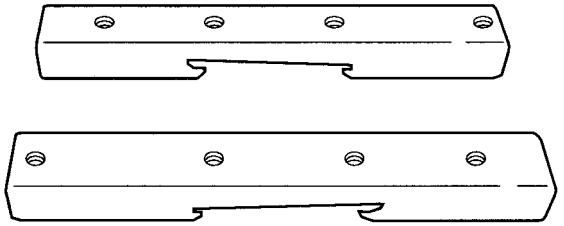

ITNC-DIN01
DIN Track Mounting Bracket

Four mounting screws

- The ITNC-DIN01 DIN Track Mounting Bracket is used when mounting an Open Network Controller to DIN Track. DIN Track mounting is possible for both Standard and Expansion Models.
- The ITNC-AP001 Standard Model Mounting Bracket or ITNC-AP002 Expansion Model Mounting Bracket is also required to mount vertically on DIN Track.
- Refer to *3-4 Installing the Open Network Controller* for installation methods.

1-3 Basic Application Procedure

The following procedure can be used to install and set up an Open Network Controller.

1, 2, 3...

1. Design the configuration of the network on paper, including the following. Refer to *4-7 Setting Examples.*
   - The networks to be used and the network addresses
   - Node addresss
   - FINS routing
   - Event memory allocation
2. Mount the Expansion Board (for Expansion Models only). Refer to *3-3 Mounting Expansion Boards.*
3. Set the DIP switches. Refer to *3-2 DIP Switch Settings.*
4. Connect the cables, including the following. (See note.) Refer to *Section 3 Hardware*.
   - Power supply cables
   - Cables for Unit settings
   - Network cables

   Note Refer to *Section 6 ITNC-EIS01-CST and ITNC-EIX01-CST* for ITNC-EIS01-CST and ITNC-EIX01-CST cable connections.
5. Take the settings designed on paper and actually make them in the Open Network Controller using one of the following methods. Refer to *Section 4 Software Settings.*
   - Use a simple tool on the Open Network Controller (use a HyperTerminal via COM1 or use Telnet via Ethernet).
   - Use a text editor on Windows and transfer the settings after editing.
   - Edit directly on the Open Network Terminal using the vi editor (use a HyperTerminal via COM1 or use Telnet via Ethernet)

   Note Refer to *4-3-3 Backing Up Settings* for backup methods.
6. Restart the Open Network Controller (e.g., cycle power).
7. Start operation, i.e., start FINS communications. Refer to Section *5 FINS Commands.*

SECTION 2
Functions

This section outlines the functions of the Open Network Controllers.

2-1 System Configuration 10
2-2 CPU_UNIT Functions 11
2-3 NP Functions and Precautions 12
2-3-1 ETN_UNIT 13
2-3-2 HLK_UNIT 13
2-3-3 DRM_UNIT 16
2-3-4 CLK_UNIT 17
2-3-5 SYSMAC_UNIT 18

2-1 System Configuration

Hardware Configuration

The configuration of an Open Network Controller is shown in the following illustration.

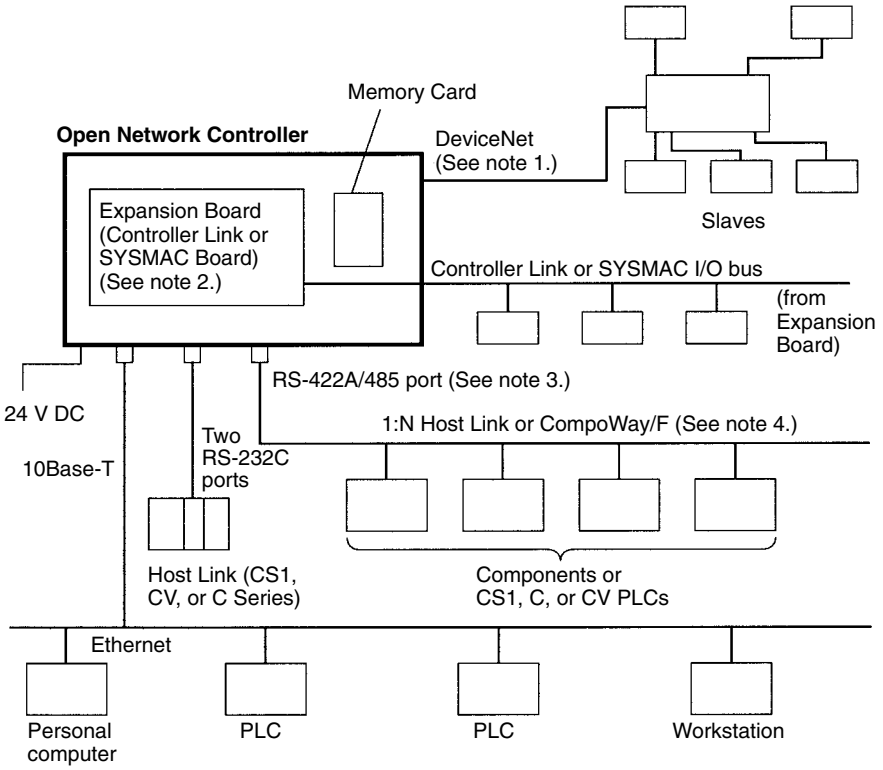

Note

1. DeviceNet is supported by the ITNC-EIS01-DRM and ITNC-EIX01-DRM.
2. A Controller Link Board or a SYSMAC Board can be mounted in the ITNC-EIX01 or ITNC-EIX01-DRM. Only one slot is provided.
3. The RS-422A/485 port (COM3 port) is supported by the ITNC-EIX01 or ITNC-EIX01-DRM.
4. Both Host Link and CompoWay/F connections are not possible from a single COM port.

Software Configuration

The software configuration of the Open Network Controller is illustrated below.

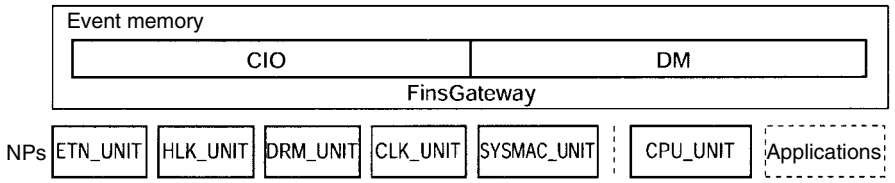

Component	Function
CPU_UNIT	CPU_UNIT provides functions of a CPU Unit in a PLC. The variables in event memory can be read and written from personal computers and other devices on the networks by sending FINS commands.
Event memory	The variables in event memory can be allocated to slave I/O on a DeviceNet network, to data links on a Controller Link network, or to I/O memory for the SYSMAC Board.
NPs	NP stands for network provider. The network providers function as Communications Units to provide network software services. Data is read or written by sending FINS commands to the NPs or by sending FINS commands to connected devices through the NPs. ETN_UNIT: The Ethernet NP. HLK_UNIT: The C-mode and CV-mode Host Link (SYSMAC WAY) and CompoWay/F NP. DRM_UNIT: The DeviceNet NP. CLK_UNIT: The Controller Link NP. SYSMAC_UNIT: The SYSMAC Board connection NP.
FinsGateway	FinsGateway performs communications between CPU_UNIT and the NPs, communications between NPs, and FINS routing. It also manages the event memory.

Note Refer to the following Web site for the most recent information on software for Open Network Controllers.
http://www.plcsoft.ne.jp/it/onc/english/index.html

2-2 CPU_UNIT Functions

CPU_UNIT is a software component that emulates the FINS message functions of the CPU Unit in a PLC. The event memory (i.e., the variable memory in the Open Network Controller) can be read and written from personal computers and other devices on the networks.

FINS Commands Addressed to CPU_UNIT

The following FINS commands can be addressed to CPU_UNIT.

Command code	Name and function
01 01	MEMORY AREA READ: Reads event memory
01 02	MEMORY AREA WRITE: Writes event memory
02 01	PARAMETER AREA READ: Reads the routing tables
02 02	PARAMETER AREA WRITE: Writes the routing tables
02 03	PARAMETER AREA CLEAR: Clears the routing tables
02 25	ROUTING TABLE SET
05 01	CONTROLLER DATA READ
05 02	CONNECTION DATA READ
07 01	CLOCK READ
07 02	CLOCK WRITE
07 03	TIME COMPENSATION (unit version 1.1 or later)
08 01	INTERNODE ECHO TEST

Note FINS commands addressed to CPU_UNIT must be sent through an NP.

Refer to *5-2 FINS Commands Addressed to CPU_Unit* for details on FINS commands addressed to CPU_UNIT.

Event Memory

Event memory is the internal memory for FinsGateway. Just like the CIO and DM areas in a PLC, the event memory can be allocated to DeviceNet slave I/O data, Controller Link data links, or for other purposes. The event memory can be accessed by using FINS commands. An example is given below.

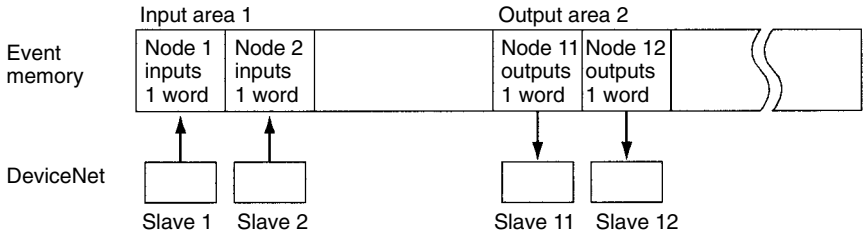

It would be possible to read or write the I/O data for more than one DeviceNet slave using a single FINS command

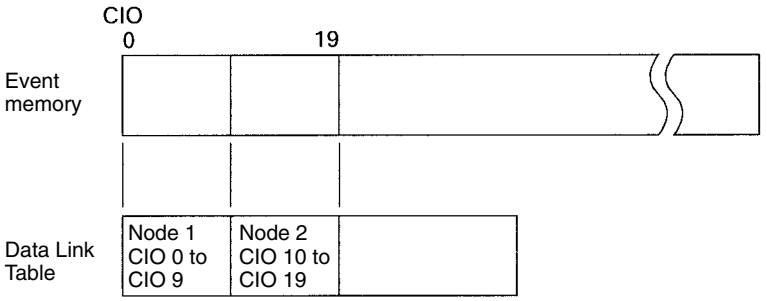

Data link words are allocated in event memory according to settings for the data link tables. The Controller Link Support Software is used to set the Data Link Tables.

2-3 NP Functions and Precautions

The network providers (NPs) are software components that provide the software functions for networks just like Communications Units do for PLCs. Data can be read and written by addressing FINS commands to the NPs or by addressing FINS commands to CPU_UNIT and sending them through an NP.

The FINS commands that can be addressed to each NP and the precautions for the NP are described next.

2-3-1 ETN_UNIT

ETN_UNIT is a software component that functions like a Communication Unit to connect to an Ethernet network.

FINS Commands Addressed to ETN_UNIT

The following FINS commands can be addressed to ETN_UNIT.

Command code	Name
05 01	CONTROLLER DATA READ
27 50	IP ADDRESS TABLE WRITE
27 60	IP ADDRESS TABLE READ
27 65	ADDRESS DATA READ

Precautions

- The IP address of the Open Network Controller is set in software. Refer to *4-3-6 SYSTEM SETUP*. The default address is 10.0.0.1 with a subnet mask of 255.0.0.0.
- FINS communications use the UDP protocol. Confirm the reception of FINS command by processing the FINS responses in the application program.
- FINS communications will not be possible with nodes that are not registered in the IP address table. The address of the destination node must be registered in the IP address tables of both nodes involved in FINS communications.
- The IP fragmentation queue in the Open Network Controller can contain up to 200 entries. Each buffer is 4 Kbytes.
- FINS node address 255 cannot be used for IP broadcast transmissions.

2-3-2 HLK_UNIT

HLK_UNIT is a software component that converts FINS commands to the following communications protocols.

Supported Serial Communications Protocols

The following three serial communications protocols are supported.
C-series Host Link (SYSMAC WAY)
CV-series Host Link (SYSMAC WAY)
CompoWay/F

HLK_UNIT converts FINS commands to commands in the above protocols. This function enables FINS message communications between personal computers and other devices on the Ethernet network and the following devices, including OMRON FA components that support the CompoWay/F protocol and the following OMRON PLCs.

- PLCs that do not directly support FINS commands, e.g., the CQM1, SRM1, C1000H, C2000H, and C20P.
- Temperature Controllers (e.g., the E5CN) and Intelligent Signal Processors on a CompoWay/F network, which previously could not connect to personal computers and other devices on Ethernet networks.

Applicable FINS Commands and Applicable PLCs

The FINS commands supported by each protocol and the applicable PLCs are given below.

C-series Host Link Protocol

FINS Commands

Command code	Name
01 01	READ MEMORY AREA
01 02	WRITE MEMORY AREA
04 01	RUN
04 02	STOP
05 01	CONTROLLER DATA READ
06 01	CONTROLLER STATUS READ
08 01	LOOPBACK TEST
22 0F	FILE MEMORY INDEX READ
22 10	FILE MEMORY READ
22 11	FILE MEMORY WRITE
23 01	FORCED SET/RESET
23 02	FORCED SET/RESET CANCEL

Applicable PLCs

The following PLCs support the C-series Host Link protocol. (Not all of the above FINS commands are supported by each of the PLCs.)

C20, C50, C120, C120F, C20H/C28H/C40H/C60H, C20P/C28P/C40P/C60P, C20PF/C28PF/C40PF/C60PF, C500, C500F, C1000H, C1000HF, C2000H, C200H, C200HS, C200HX/HG/HE, CQM1, CPM1, CPM1A, CPM2A, CPM2C, SRM1, CV500, CVM1, CV1000, CV2000, and CS1.

CV-series Host Link Protocol

FINS Commands

Command code		Name
01	01	MEMORY AREA READ
	02	MEMORY AREA WRITE
	03	MEMORY AREA FILL
	04	MULTIPLE MEMORY AREA READ
	05	MEMORY AREA TRANSFER
02	01	PARAMETER AREA READ
	02	PARAMETER AREA WRITE
	03	PARAMETER AREA CLEAR
03	04	PROGRAM AREA PROTECT
	05	PROGRAM AREA PROTECT CLEAR
	06	PROGRAM AREA READ
	07	PROGRAM AREA WRITE
	08	PROGRAM AREA CLEAR
04	01	RUN
	02	STOP
05	01	CONTROLLER DATA READ
	02	CONNECTION DATA READ
06	01	CONTROLLER STATUS READ
	20	CYCLE TIME READ
07	01	CLOCK READ
	02	CLOCK WRITE
09	20	MESSAGE READ (MESSAGE CLEAR, FAL/FALS READ)
0C	01	ACCESS RIGHT ACQUIRE
	02	ACCESS RIGHT FORCED ACQUIRE
	03	ACCESS RIGHT RELEASE
21	01	ERROR CLEAR
	02	ERROR LOG READ
	03	ERROR LOG CLEAR
22	01	FILE NAME READ
	02	SINGLE FILE READ
	03	SINGLE FILE WRITE
	04	MEMORY CARD FORMAT
	05	FILE DELETE
	06	VOLUME LABEL CREATE/DELETE
	07	FILE COPY
	08	FILE NAME CHANGE
	09	FILE DATA CHECK
	0A	MEMORY AREA FILE TRANSFER
	0B	PARAMETER AREA FILE TRANSFER
	0C	PROGRAM AREA FILE TRANSFER
23	01	FORCED SET/RESET
	02	FORCED SET/RESET CANCEL

Applicable PLCs

The following PLCs support the CV-series Host Link protocol. (Not all of the above FINS commands are supported by each of the PLCs.)

CVM1 and CV-series PLCs

CompoWay/F Protocol

Applicable Commands

The commands that can be used depend on the CompoWay/F component. Refer to the operation manuals for the components.

Refer to *5-4 FINS Commands Addressed to HLK_UNIT* for information on sending FINS commands to CompoWay/F components.

Applicable Models

Commands can be sent to any component that supports the CompoWay/F protocol.

Precautions

Slave-initiated (i.e., PLC-initiated) communications using FINS commands are not possible with HLK_UNIT.

2-3-3 DRM_UNIT

DRM_UNIT is a software component that functions like a Communication Unit to connect to a DeviceNet network.

DeviceNet Communications Methods

Any of the following three methods can be used to communicate between personal computers and other devices on an Ethernet network and devices on the DeviceNet network.

- Allocate DeviceNet remote I/O data to event memory and read/write event memory.
- Send/receive FINS messages to/from devices on the DeviceNet network (only for devices that support FINS). (Not all FINS communications functions are supported for all devices (e.g., CS1-series PCs).
- Send explicit messages to devices on the DeviceNet network.

Allocating Event Memory

If DeviceNet remote I/O is allocated in event memory, personal computers and other devices on an Ethernet network can access remote I/O data by reading/writing event memory.

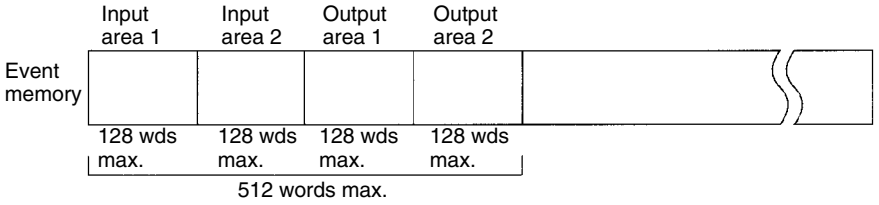

Up to two input areas and two outputs areas can be allocated in event memory. Each area can contain up to 128 words, for a maximum of 256 input words and 256 output words.

Allocations can be made for a maximum of 63 nodes and up to 32 words (64 bytes) can be allocated per node in each area.

Allocated words are refreshed periodically and the refresh interval can be specified in increments of 1 ms. (The refresh interval must be greater than the communications cycle time. Refer to *4-7-5 DeviceNet NP Settings* for details.)

Allocation and refresh settings are made in the following two files. Refer to *4-7-2 Ethernet Settings* onwards for setting methods.

- FgwQnxDrm.ini: Event memory allocations
- scanlist.ini: Scan list settings

In addition to the I/O areas, can also be allocated as a 81 words status area. Refer to *DeviceNet Status Area Contents* under *4-6-7 DRM_UNIT* Settings for details.

Explicit Messages

FINS command code 2801 can be used to send explicit messages to devices on the DeviceNet network. This function enables communications with the master

and slaves on the DeviceNet network. The Open Network Controller converts explicit messages returned from the DeviceNet devices to FINS responses.

FINS Commands Addressed to DRM_UNIT

The following FINS commands can be addressed to DRM_UNIT.

Command code	Name
04 01	RUN
04 02	STOP
04 03	RESET
05 01	CONTROLLER DATA READ
08 01	LOOPBACK TEST
28 01	EXPLICIT MESSAGE SEND

Precautions

I/O areas and the status areas must be set so that they do not use words allocated to other purposes.

The longest FINS message beginning with ICF exchanged between DeviceNet networks has 507 bytes.

2-3-4 CLK_UNIT

CLK_UNIT is a software component that functions like a Communication Unit to connect to a Controller Link network through a Controller Link Support Board.

FINS Commands Addressed to CLK_UNIT

The following FINS commands can be addressed to CLK_UNIT (i.e., to the Controller Link Support Board). Data link areas are set using the Controller Link Support Software.

Command code		Data links		Name
		Active	Stopped	
04	01	No	OK	RUN
	02	OK	No	STOP
05	01	OK	OK	CONTROLLER DATA READ
06	01	OK	OK	CONTROLLER STATUS READ
	02	OK	OK	NETWORK STATUS READ
	03	OK	OK	DATA LINK STATUS READ
08	01	OK	OK	LOOPBACK TEST
	02	OK	OK	BROADCAST TEST RESULTS READ
	03	OK	OK	BROADCAST TEST DATA SEND
21	02	OK	OK	ERROR LOG READ
	03	OK	OK	ERROR LOG CLEAR

Allocating Event Memory

If data link areas are allocated in event memory, the Open Network Controller can participate in the data links on the Controller Link Network, and personal computers and other devices on an Ethernet network can access remote data link areas by reading/writing event memory. In the Open Network Controller, the CIO and DM areas can be used to create data link areas.

Data link area are set using the Controller Link Support Software.

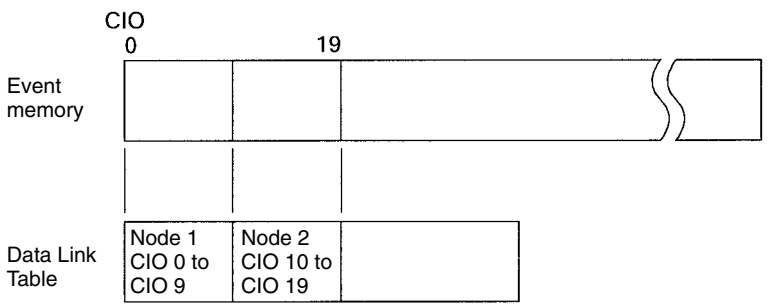

Precautions

- Data link areas must be set so that they do not use words allocated to other purposes.
- The refresh interval from the data link memory on the Controller Link Support Board to event memory is 100 ms.
- To use the Controller Link Board without changing the factory settings of the Open Network Controller, set the memory address of the Controller Link Board to $DA00 (i.e., set DIP switch pin 2 to ON and pins 1, 3, and 4 to OFF) and set the interrupt level to 15. This means you must change the factory settings of the Controller Link Board.

2-3-5 SYSMAC_UNIT

SYSMAC_UNIT is a software component for connecting a SYSMAC Board. As shown in the following diagram, SYSMAC_UNIT and the SYSMAC Board are treated as separate nodes on the FINS network. This is not true for CLK_UNIT and the Controller Link Support Board.

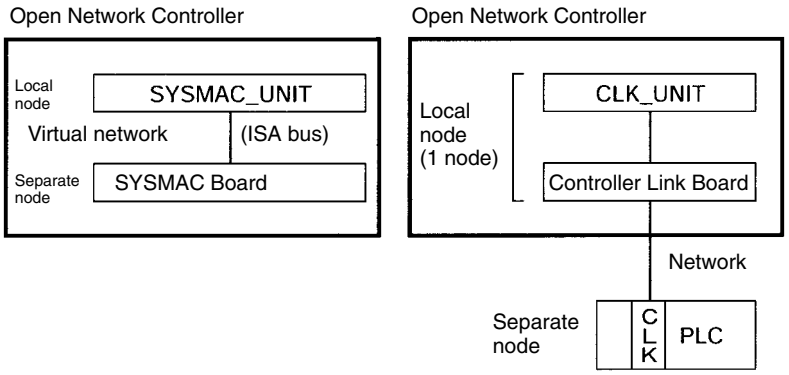

The FINS commands supported by SYSMAC_UNIT and the SYSMAC Board are not the same, as shown in the following tables.

FINS Commands Addressed to SYSMAC_UNIT

The following FINS commands can be addressed to SYSMAC_UNIT.

Command code		Name
05	01	CONTROLLER DATA READ

FINS Commands Addressed to SYSMAC Board

The following FINS commands can be addressed to the SYSMAC Board.

Command code		Name
01	01	MEMORY AREA READ
	02	MEMORY AREA WRITE
04	01	RUN
	02	STOP
05	01	CONTROLLER DATA READ
06	01	CONTROLLER STATUS READ
07	01	CLOCK READ
	02	CLOCK WRITE

Allocating Event Memory

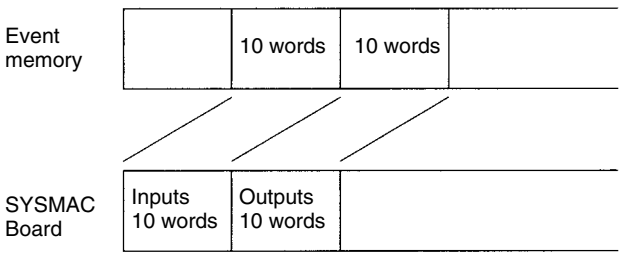

Precautions

- The default setting for the startup mode for the SYSMAC Board when power is turned ON is for the startup mode to be determined by settings in the SYSMAC Board.
- One ladder program cycle in the SYSMAC Board is required for every line set in the event memory map.
- To use the SYSMAC Board without changing the factory settings of the Open Network Controller, use the I/O port address of the SYSMAC Board set to $3A0 (i.e., the factory-set value).

SECTION 3
Hardware

This section provides information on the hardware components, installation, and settings of the Open Network Controller.

3-1 Nomenclature and Functions 22
3-1-1 Component Names and Functions 22
3-1-2 Indicator and 7-segment Displays 24
3-2 DIP Switch Settings 26
3-3 Mounting Expansion Boards 28
3-4 Installing the Open Network Controller 31
3-4-1 Orientation 31
3-4-2 Mounting Dimensions 32
3-4-3 Installation with Screws 34
3-4-4 Installation on DIN Track 36
3-5 Connecting the Power Supply Cable 39
3-5-1 Connecting the Cable 39
3-5-2 Wiring the Ground 41
3-6 Connecting COM Port Cables 41
3-6-1 Terminal Connections to COM1 41
3-6-2 Host Link (SYSMAC WAY C/CV) 42
3-6-3 CompoWay/F 44
3-7 Connecting DeviceNet Cables 46
3-7-1 Connectors 46
3-7-2 Connecting Communications Cables 46
3-7-3 Connecting Communications Cables to T-branch Taps 49
3-7-4 Connecting Terminating Resistors 50
3-7-5 Connecting Communications Cables to Nodes 51
3-8 Connecting Ethernet Cables 52
3-9 Handling Memory Cards 53
3-9-1 Memory Card Models 53
3-9-2 Mounting and Removing Memory Cards 54
3-9-3 Formatting Memory Cards 57

3-1 Nomenclature and Functions

This section gives the names and describes the functions of each component of the Open Network Controller.

3-1-1 Component Names and Functions

The names and functions of the Open Network Controller components will be described using the ITNC-EIX01-DRM Expansion Model with DeviceNet as an example. Some models do not have a COM3 port, a connector for DeviceNet communications, or an expansion slot.

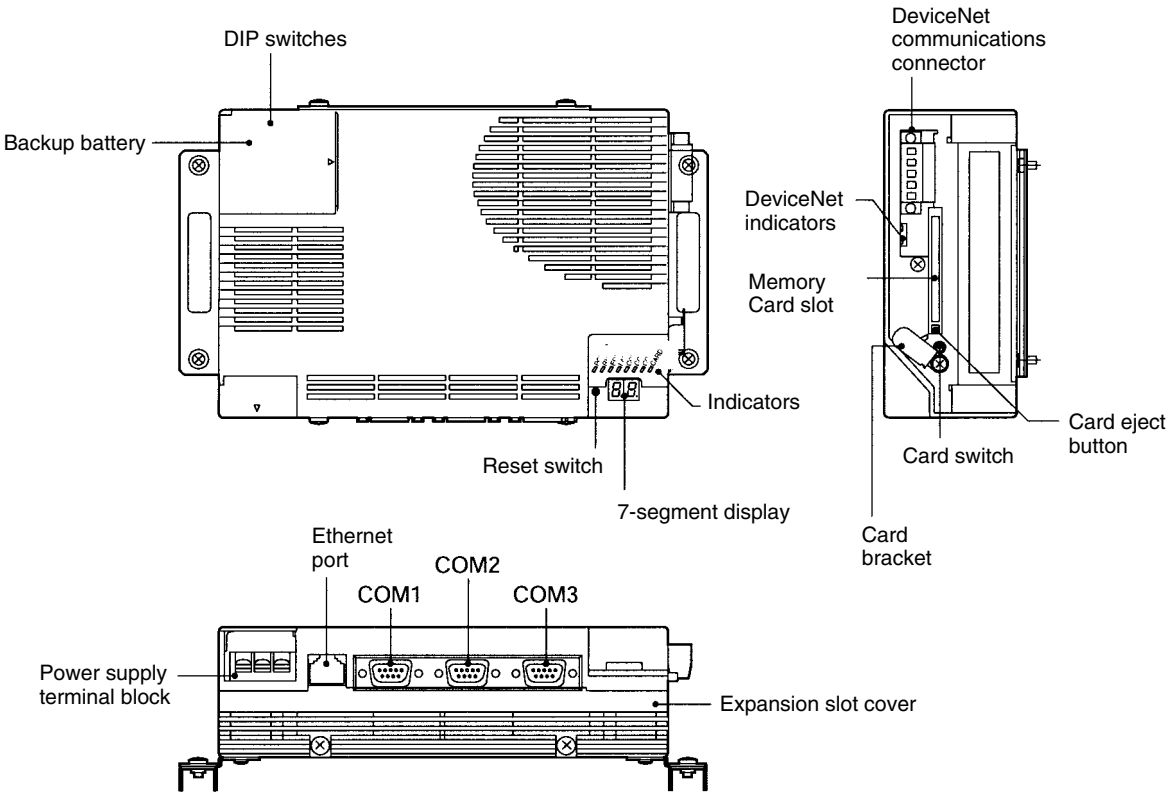

Name	Function
DIP switches	The DIP switches are used to make COM port and 7-segment display settings.
Backup battery	The backup battery backs up the real-time clock and the CMOS RAM. Replace with a C500-BAT08 Battery when required.
Power supply terminal block	The power supply terminal block connects to a 24-V DC power supply.
Ethernet port	An Ethernet cable for 10Base-T is connected to the Ethernet port.
COM1	RS-232C
COM2	RS-232C
COM3 (only with Expansion models)	RS-422A/485
Expansion slot cover (ITNC-EIX01 and ITNC-EIX01-DRM only)	The expansion slot is an ISA bus slot. Remove the cover to mount a Controller Link or SYSMAC Board.
Indicators	The indicators show the status of Open Network Controller operation.
7-segment display	The 7-segment display shows the error code, IP address, MAC ID on the DeviceNet network, or the FINS address, according to the DIP switch settings.
Memory Card slot	A Memory Card is mounted in this slot.
Card bracket	This bracket holds the Memory Card in place. Be sure to secure the Card with this bracket.
Card switch	Press the card switch when inserting or removing a Memory Card. When inserting a Memory Card, press this switch to enable using the card. The CARD indicator will light. When removing the Memory Card, press this switch to enable removing the card. The CARD indicator go out.
Card eject button	Press the card eject button to remove the Memory Card. Before pressing this button, press the card switch and make sure the CARD indicator is not lit.
DeviceNet indicators	These indicators show the status of the DeviceNet network.
DeviceNet communications connector (ITNC-EIS01-DRM and ITNC-EIX01-DRM only)	A DeviceNet cable is connected to this connector.

3-1-2 Indicator and 7-segment Displays

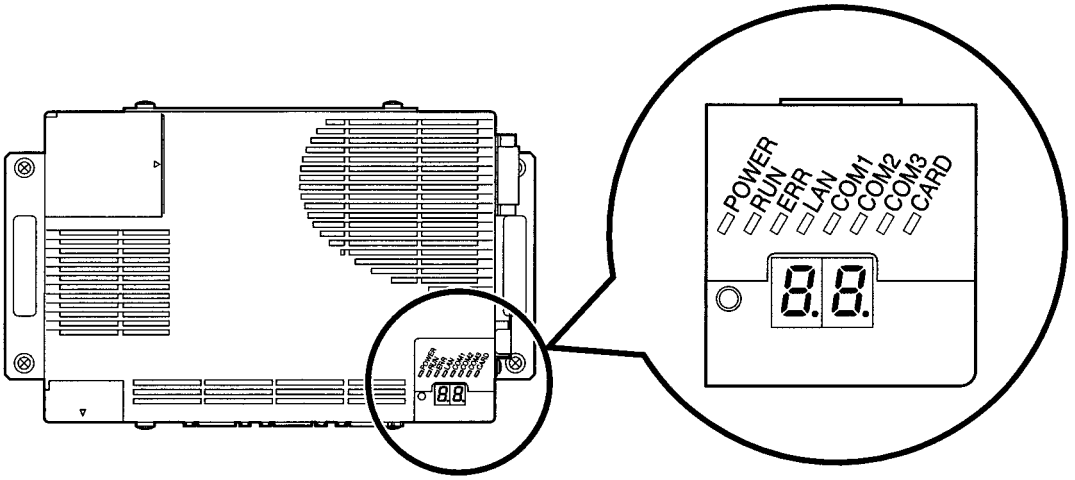

Indicators

Name	Color	Meaning
POWER	Green	Lit when the power supply is ON.
RUN	Green	Lit when the FinsGateway is running.
ERR	Red	Lit when an error occurs or flashes when the battery voltage is low.
LAN	Orange	Lit when an Ethernet cable is connected. Flashes during transmission.
COM1	Orange	Lit during COM1 data transmission.
COM2	Orange	Lit during COM2 data transmission.
COM3	Orange	Lit during COM3 data transmission (Expansion models only).
CARD	Orange	Lit when the Memory Card is being accessed. The Memory Card cannot be inserted or removed while the CARD indicator is lit. Remove or insert the card only when the indicator is not lit.
	Green	Lit when the Memory Card is being used. The Memory Card cannot be inserted or removed while the CARD indicator is lit. Remove or insert the card only when the indicator is not lit.

Seven-segment Display

7-segment display (2 digits)	The 7-segment display shows the error code, IP address, MAC ID on the DeviceNet network, or the FINS address, according to the DIP switch settings.

The 7-segment display shows alphanumeric characters. The alphabet characters that are displayed are shown below.

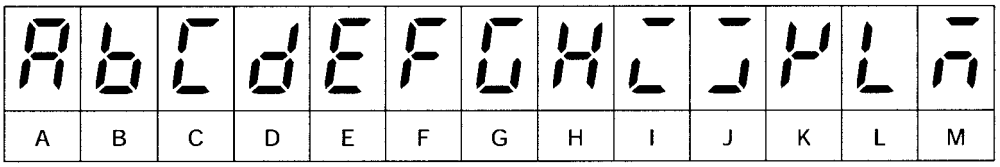

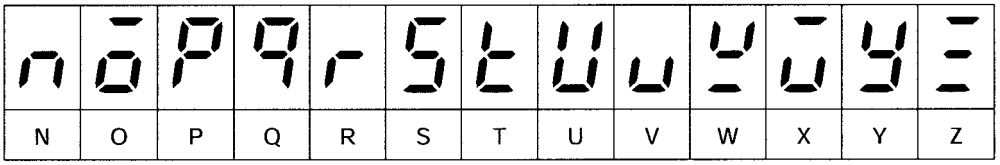

DeviceNet Indicators

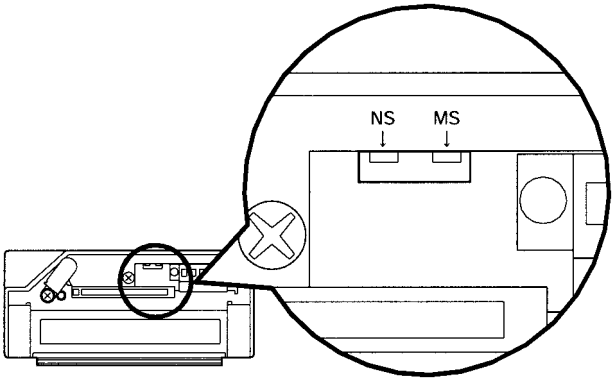

Indicator	Color	Status	Meaning
MS	---	Not lit	No power supply.
	Green	Lit	Normal.
		Flashing	Starting up.
	Red	Flashing	Fatal error. Replace the Board.
		Lit	Fatal error. Replace the Board.
NS	---	Not lit	Offline.
	Green	Lit	Normal communications.
		Flashing	Online but no connection established.
	Red	Flashing	Communications error, no slaves, or I/O size mismatch.
		Lit	Communications impossible.

Note When indicators flash, the duration the indicator is lit and then not lit is approximately 5 s each.

Refer to *7-2 DeviceNet Indicator Displays* for information on troubleshooting with the indicators.

3-2 DIP Switch Settings

The following settings are made on pins 1 to 4 of DIP switch 2.

- COM1 port settings (selection of whether to login from COM1 or to use COM1 as a Host Link port) (Pin 1)
- Seven-segment display settings (pins 2 and 3)
- Resetting to default setting (pin 4)

Do not change any pins on DIP switch 1 or pins 5 to 8 on DIP switch 2.

Note DIP switch settings must be made when the power is turned OFF.

Opening the Battery Cover

To make the DIP switch settings, first open the battery cover.

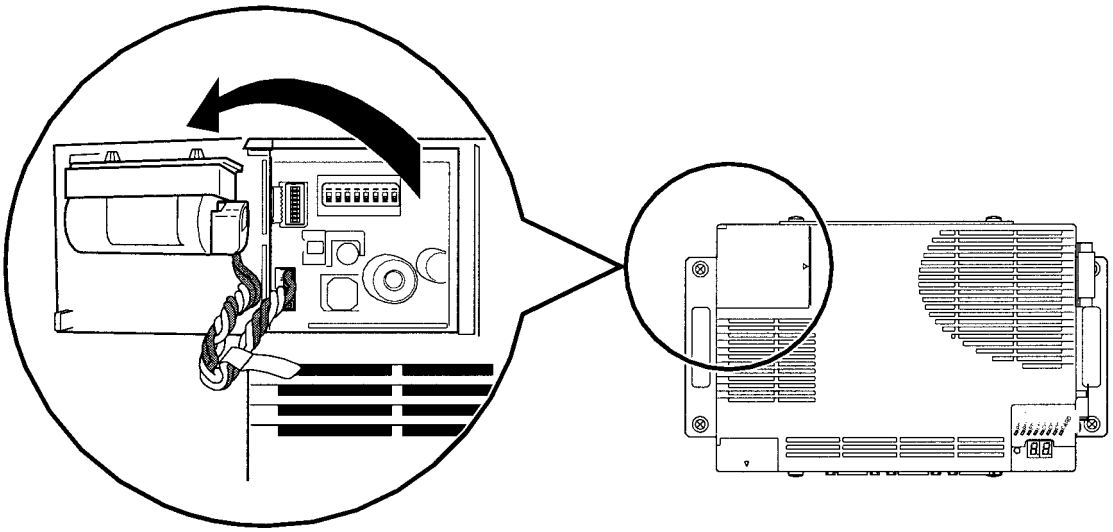

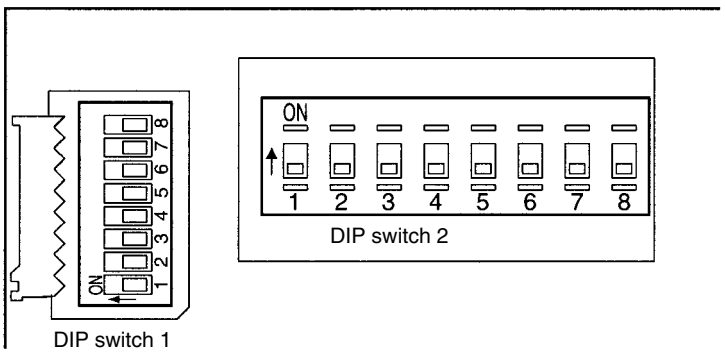

Note Do not change DIP switch 1 settings.

COM1 Port Settings (DIP Switch 2, Pin 1)

COM1 port settings are shown in the following table.

DIP Switch 2, Pin 1	Function
ON	Enables login from COM1 port. FinsGateway will not be started.
OFF	Disables login from COM1 port.

Note

1. Turn ON DIP switch 2, pin 1 to login from COM1 port and make Open Network Controller settings. Once the settings have been completed, turn OFF pin 1 to use COM1 as a Host Link port.
2. Login from the Ethernet port is always possible, regardless of the setting at DIP switch 2, pin 1.

Seven-segment Display (DIP Switch 2, Pin 2 and Pin 3)

The settings for 7-segment display are shown on the following table. If the settings are changed while the power is ON, the display will change to the new settings once the display under the old settings has been completed.

DIP Switch 2, Pin 2	DIP Switch 2, Pin 3	Display
OFF	OFF	Displays the error code when an error occurs. The 7-segment display is not valid unless the ERR indicator is lit. Refer to *7-1 Error Messages* for details.
ON	OFF	Displays the IP address for the Open Network Controller in hexadecimal. The display will be “IP” then, at approx. 1 s intervals, 8 bits at a time of the 32-bit IP address. For example, for an IP address of 192.168.1.13, the display would be “IP”, “C0”, “A8”, “01”, then “0D”.
OFF	ON	Displays the DeviceNet MAC ID.
ON	ON	Displays the FINS address. The name, network address, node address, and unit address of NPs currently operating will be displayed, in order, at approx. 1 s intervals. The first two letters of the NP names will be displayed, as shown below, and the addresses will be displayed in hexadecimal. • ET: ETN_UNIT (Ethernet NP) • SY: SYSMAC_UNIT (SYSMAC Board connection NP) • CL: CLK_UNIT (Controller Link NP) • HL: HLK_UNIT (C-mode and CV-mode Host Link (SYSMAC WAY) and CompoWay/F NP) • DR: DRM_UNIT (DeviceNet NP)

Return to Default Settings (DIP Switch 2, Pin 4)

This setting is read only when the Open Network Controller is started.

DIP Switch 2, Pin 4	Function
ON	Returns all settings files to the default settings.
OFF	Starts up using the user-defined settings files.

Note When the Open Network controller is started with pin 4 ON, all settings files will be overwritten. Make sure that it is OK to overwrite the current settings files before turning ON DIP switch 2, pin 4. About 40 seconds are required to finish this operation. Turn OFF the Open Network Controller only after the RUN indicator starts flashing.

The procedure for starting the Open Network Controller with the default settings is shown below.

1, 2, 3...

1. Turn ON DIP switch 2, pin 4.
2. Turn ON the power supply to the Open Network Controller. The RUN indicator will start flashing when all settings files have been returned to the default settings.
3. Check that the RUN indicator is flashing and then turn OFF the power supply to the Open Network Controller.
4. Turn OFF DIP switch 2, pin 4.
5. Turn ON the power supply to the Open Network Controller again. The Open Network Controller will start up with the default settings.

3-3 Mounting Expansion Boards

One of the following Boards can be mounted in the ITNC-EIX01 Expansion Model or the ITNC-EIX01-DRM Expansion Model with DeviceNet.

- 3G8F5-CLK21 Controller Link Board
- C200PC-ISA□□-DRM or C200PC-ISA□□-SRM SYSMAC Board

The mounting method will be explained using the SYSMAC Board as an example, but the method is the same for Controller Link Boards.

Note

1. Turn OFF the power supply before mounting an Expansion Board.
2. To use the Expansion Board without changing the factory settings of the Open Network Controller, keep the following conditions.
   - Set the I/O port address of the SYSMAC Board to $3A0 (i.e., the factory-set value).
   - Set the memory address of the Controller Link Board to $DA00 (i.e., set DIP switch pin 2 to ON and pins 1, 3, and 4 to OFF) and interrupt level to 15. This means you must change the factory settings of the Controller Link Board.
   - Turn OFF the power supply before mounting the Expansion Board.

1, 2, 3...

1. Remove the expansion slot cover.

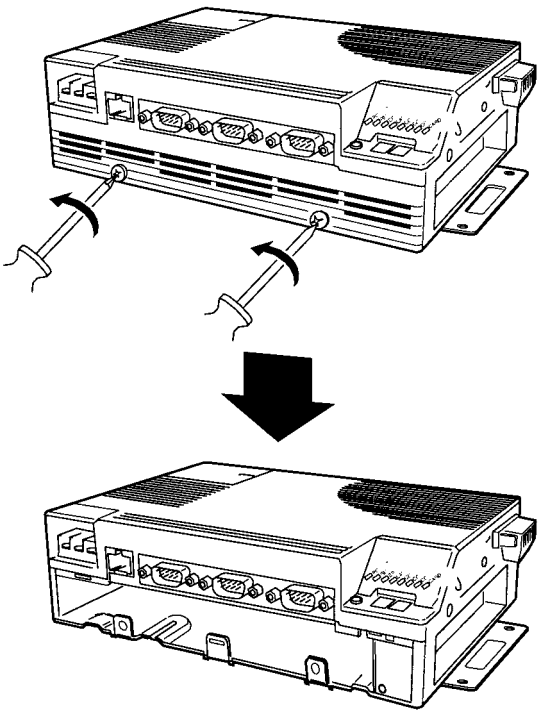

2. Remove the back cover from the Controller, the Expansion Board bracket, and the dummy panel.

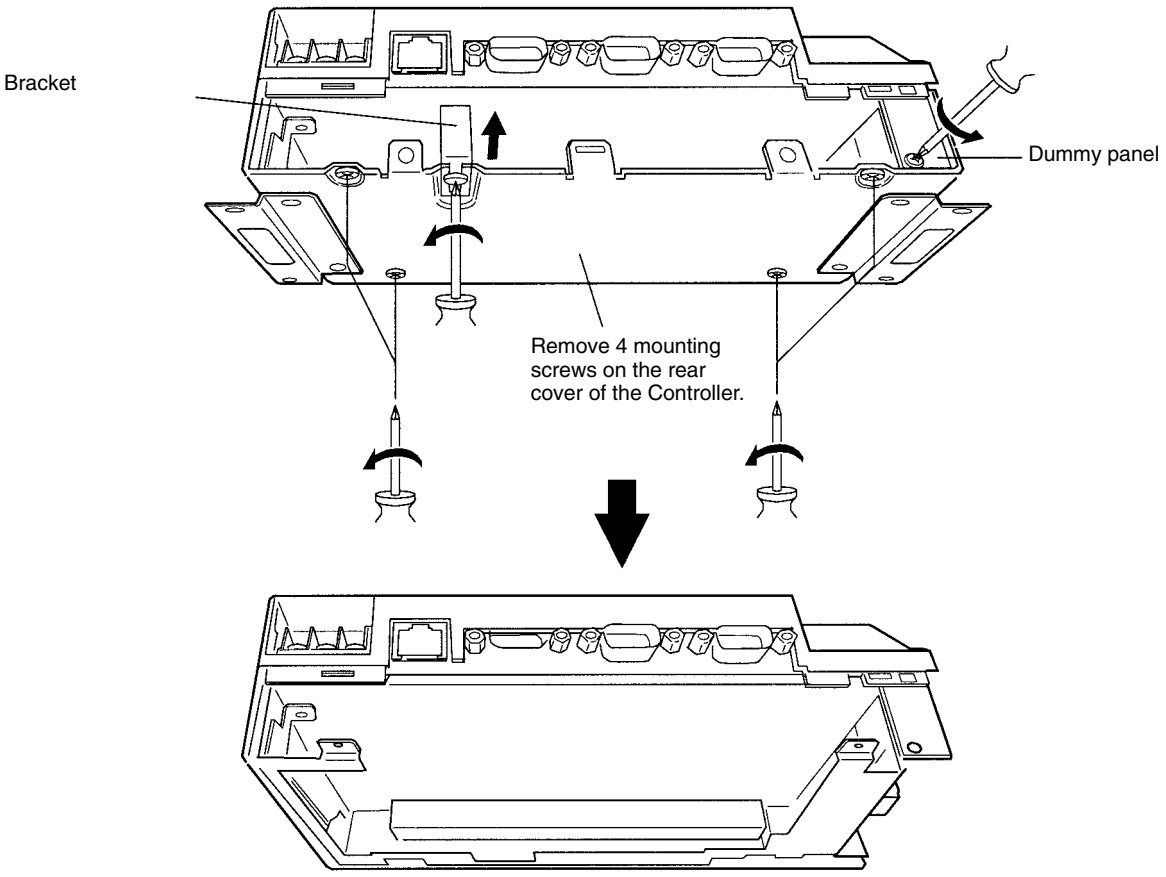

3. Insert the Expansion Board. Firmly insert the Expansion Board into the connector inside the Open Network Controller.

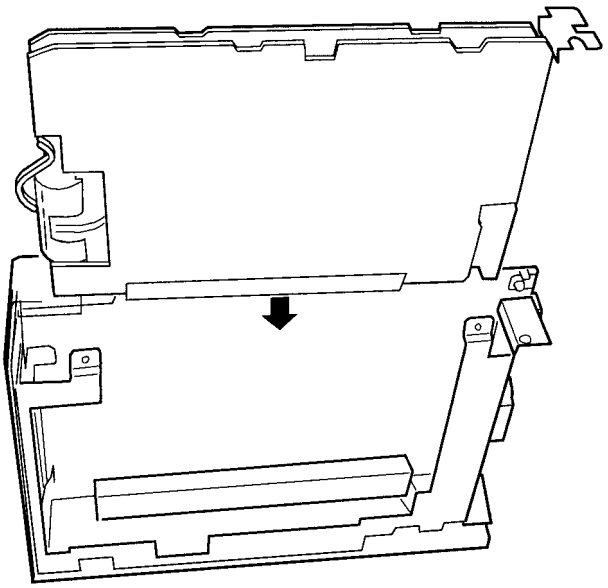

4. Replace the back cover of the Controller and then secure the Expansion Board in place using the bracket and mounting screws.

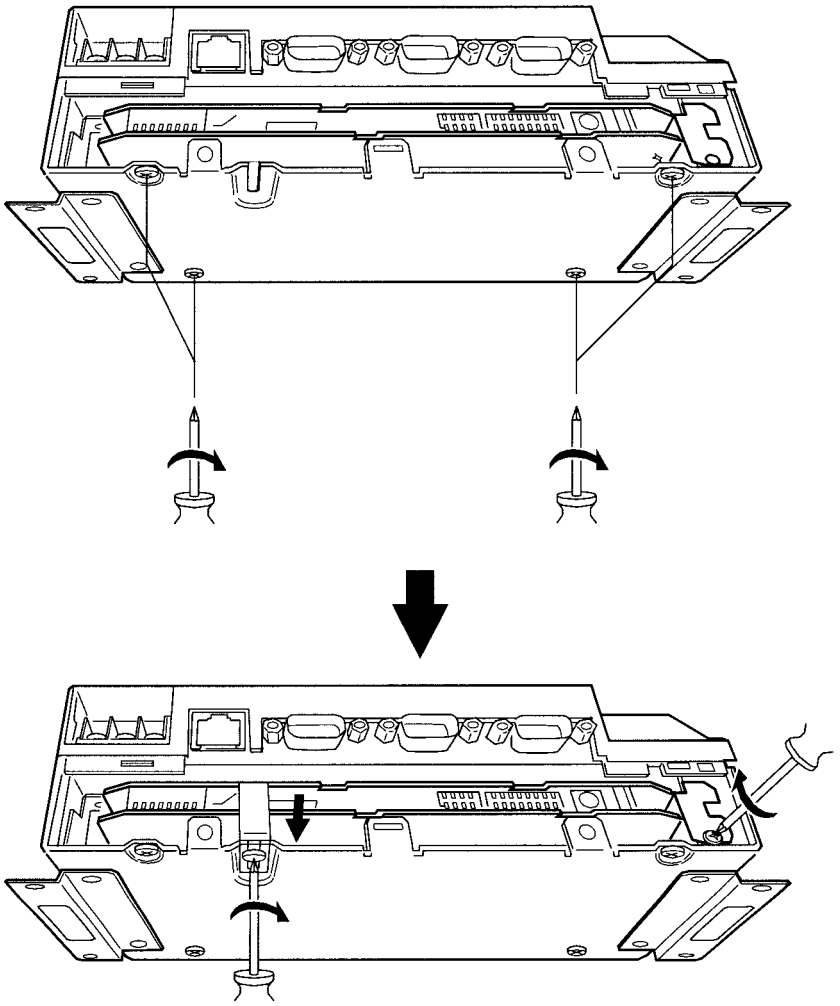

5. Replace the expansion slot cover and tighten the screws.

3-4 Installing the Open Network Controller

This section explains how to install the Open Network Controller.

3-4-1 Orientation

The Open Network Controller can be installed in any of the four ways shown in the following diagram. It can be installed either directly to a surface with screws or to DIN Track. In either case, it can be installed horizontally or vertically. Do not install the Open Network Controller in any other way.

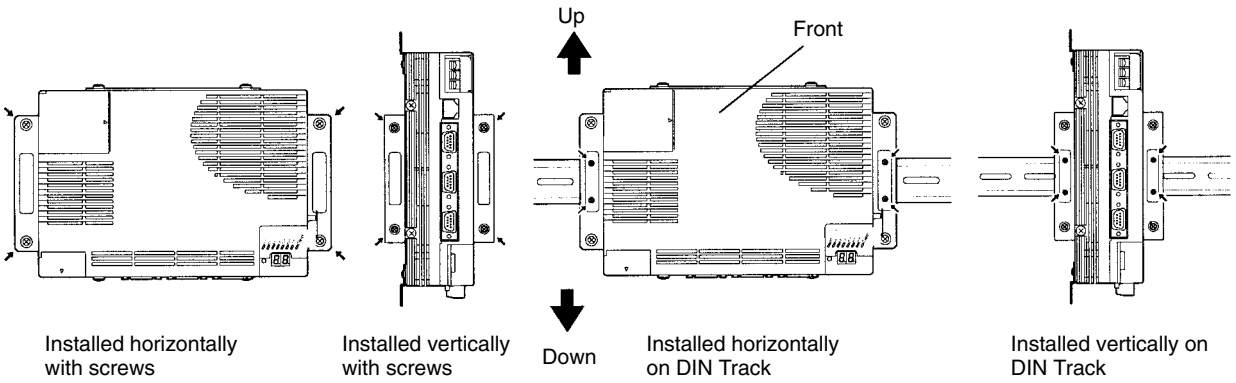

⚠ Caution Do not install the Open Network Controller in any of the following orientations.

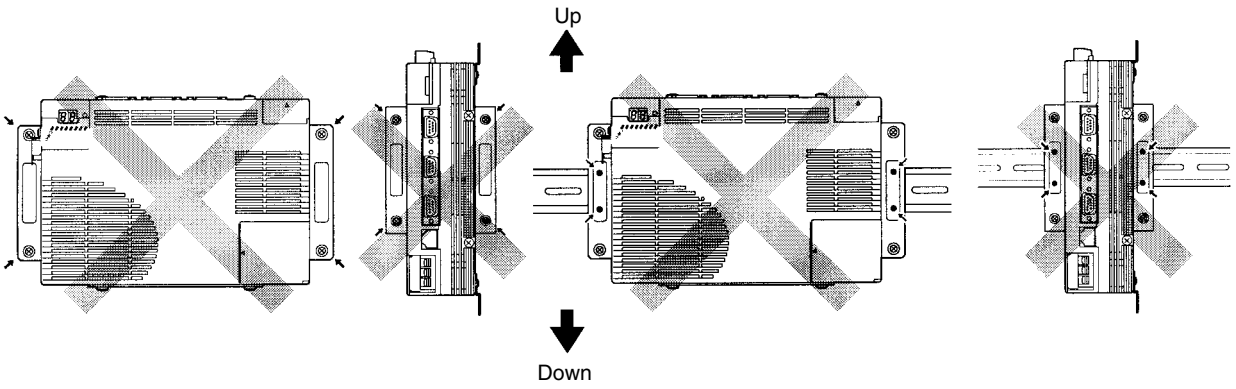

Do not install the Open Network Controller so that it is flat, i.e., horizontal with the ground.

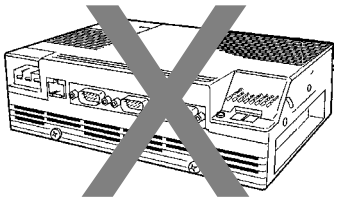

⚠ Caution Install the Open Network Controller only in the orientations indicated. Also, always leave at least 50 mm for ventilation above, below, to the right, to the left, and to the front of the Controller. If the installation orientation is incorrect or there is insufficient ventilation space, the internal temperature of the Controller will increase and the Controller may malfunction.

Note Allow enough space to insert and remove connectors, cables, and Memory Cards.

3-4-2 Mounting Dimensions

ITNC-EIS01 Standard Model and
ITNC-EIS01-DRM Standard Model with DeviceNet
ITNC-EIS01-CST (Standard Model with CS1 Bus Interface)

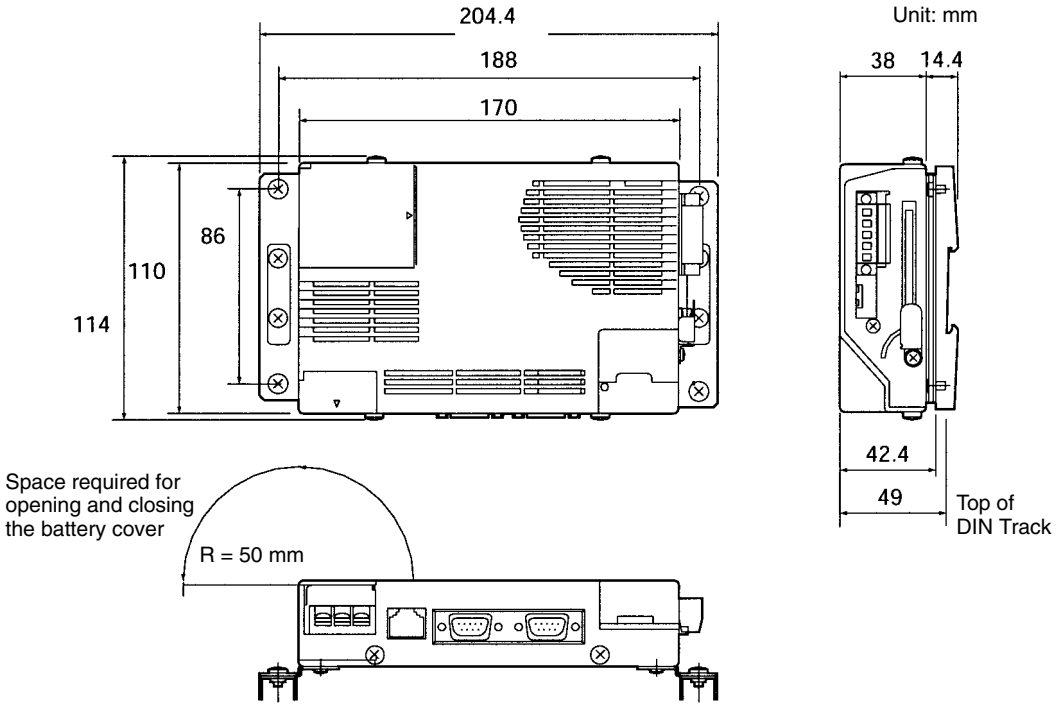

ITNC-EIX01 Expansion Model and
ITNC-EIX01-DRM Expansion Model with DeviceNet
ITNC-EIX01-CST (Expansion Model with CS1 Bus Interface)

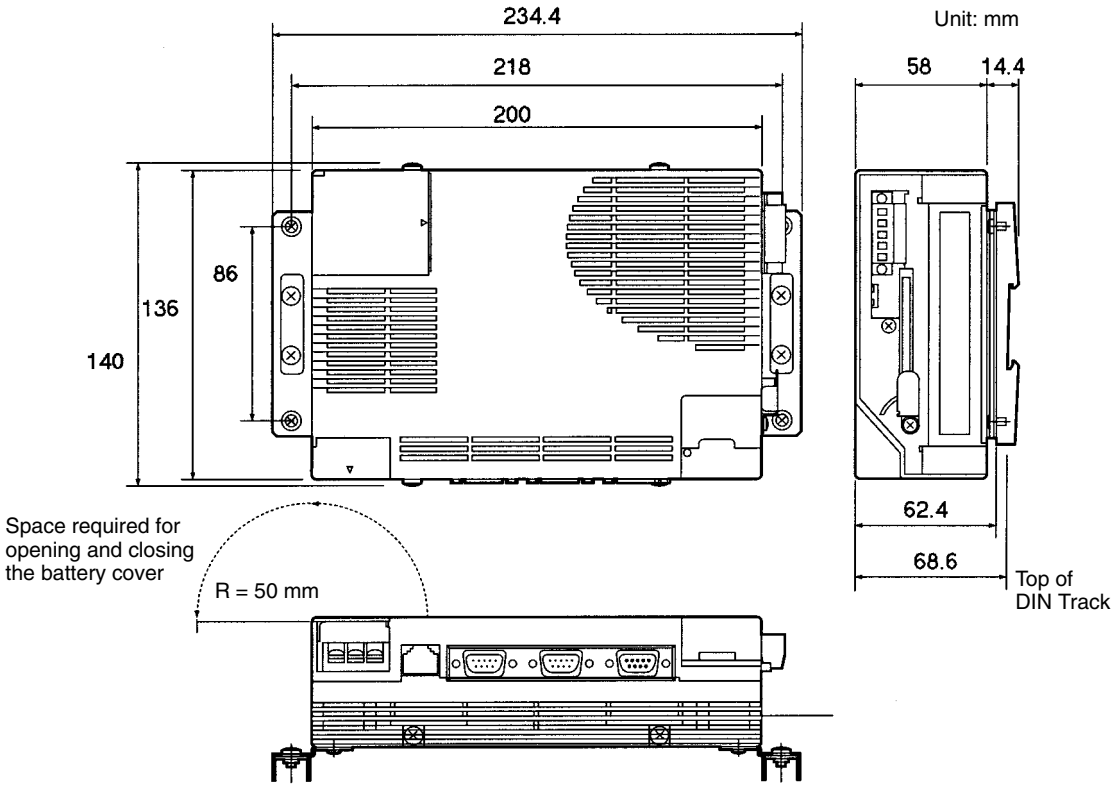

ITNC-AP001 Standard Model Mounting Bracket

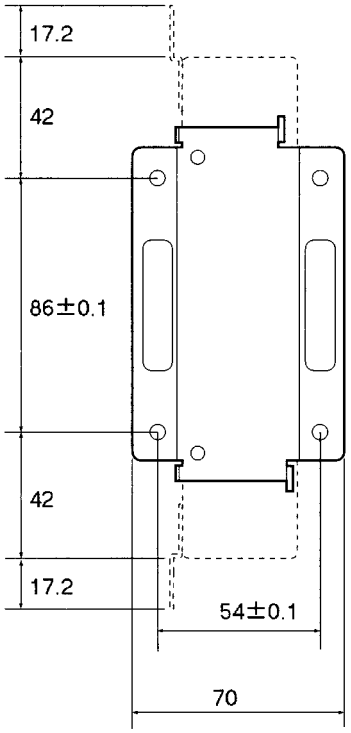

ITNC-AP002 Expansion Model Mounting Bracket

Unit: mm

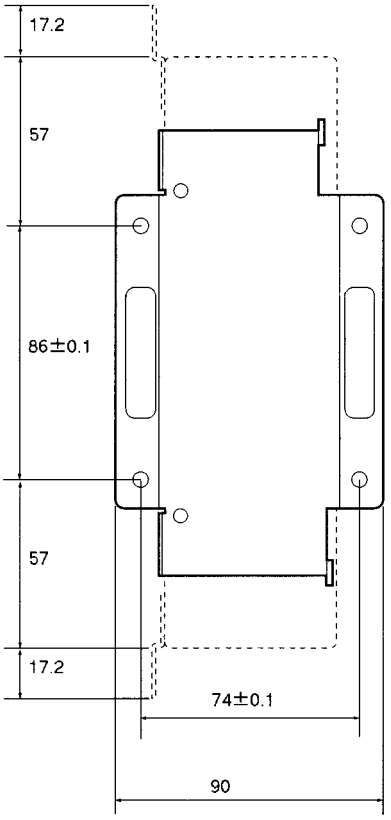

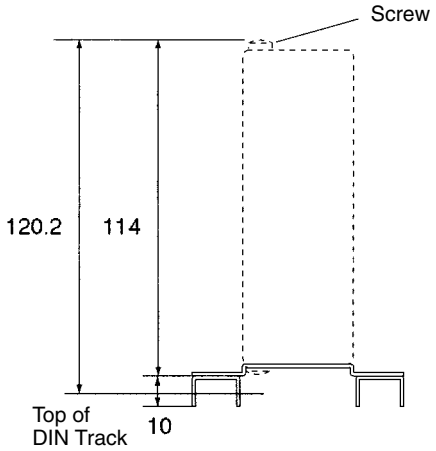

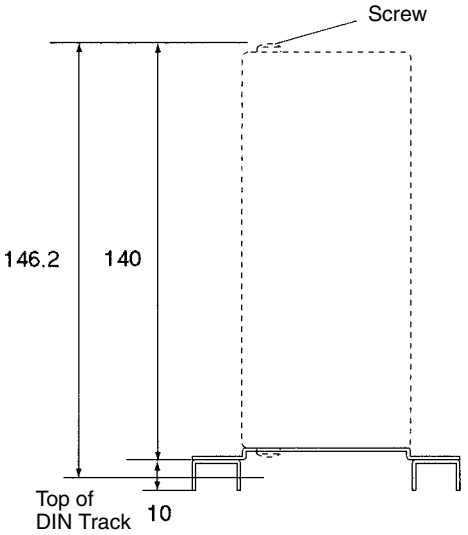

3-4-3 Installation with Screws

This section explains how to install the Open Network Controller by directly screwing it to the mounting surface. DIN Track is not used in this method. The examples use the Expansion Models, but the installation method is the same for the Standard Models.

The M4 screws must be tightened to a torque of 0.9 N·m.

⚠ Caution Install the Open Network Controller only in the orientations indicated. Also, always leave at least 50 mm for ventilation above, below, to the right, to the left, and to the front of the Controller. If the installation orientation is incorrect or there is insufficient ventilation space, the internal temperature of the Controller will increase and the Controller may malfunction.

Horizontal Installation

Use four M4 screws to install the Open Network Controller horizontally. M4 screws are not supplied with the Controller. A Mounting Bracket (sold separately) is not required.

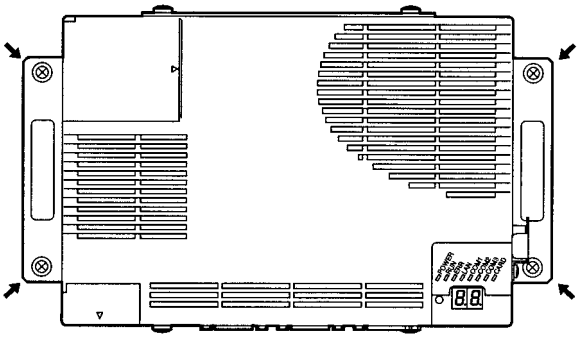

Vertical Installation

Use the following procedure to install the Open Network Controller vertically.

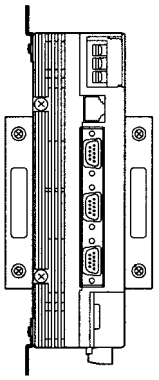

1, 2, 3... 1. Remove the two screws on the rear of the Controller.

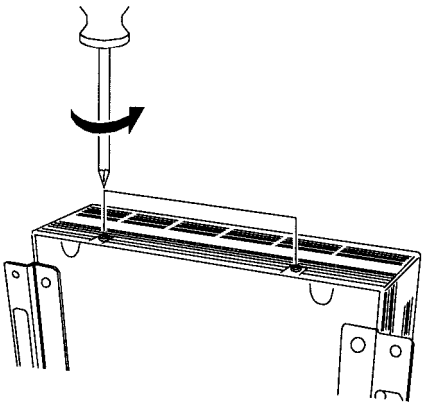

2. Mount the Mounting Bracket on the Open Network Controller, as shown below, and secure in place with the screws removed in the previous step.

   Use the ITNC-AP001 Mounting Bracket for Standard Models and the ITNC-AP002 Mounting Bracket for Expansion Models.

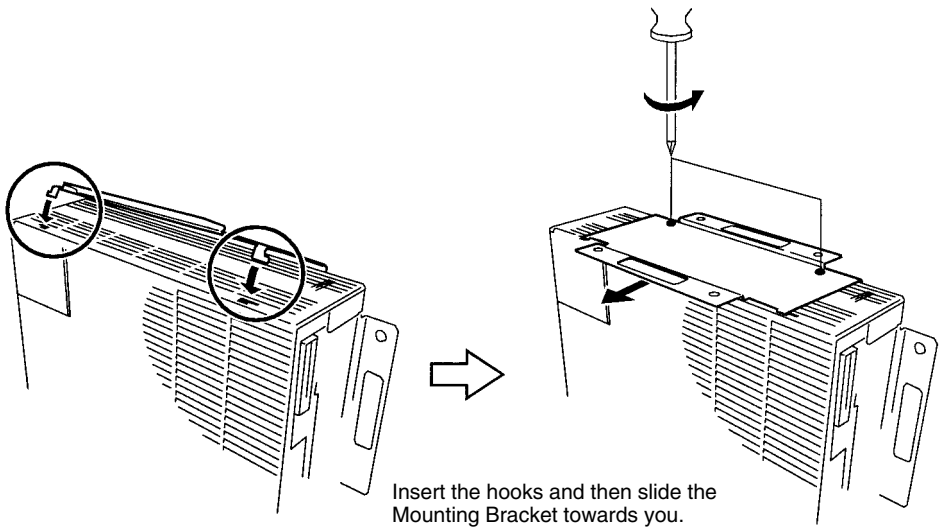

Insert the hooks and then slide the Mounting Bracket towards you.

3. Use four M4 screws to secure the Open Network Controller in place. M4 screws are not supplied with the Controller.

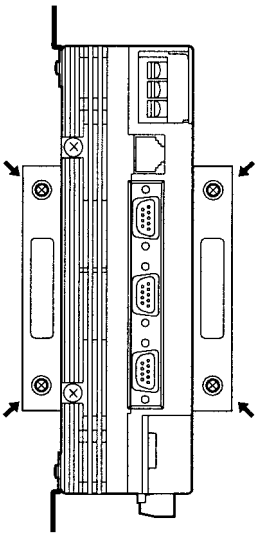

3-4-4 Installation on DIN Track

⚠ Caution Install the Open Network Controller only in the orientations indicated. Also, always leave at least 50 mm for ventilation above, below, to the right, to the left, and to the front of the Controller. If the installation orientation is incorrect or there is insufficient ventilation space, the internal temperature of the Controller will increase and the Controller may malfunction.

This section explains how to install the Open Network Controller on DIN Track. The examples use the Expansion Models, but the installation method is the same for the Standard Models.

The M4 screws must be tightened to a torque of 0.9 N·m.

Horizontal Installation

1, 2, 3... 1. Use M4 screws to secure the ITNC-DIN01 DIN Track Mounting Brackets to the Open Network Controller, as shown in the following diagram. M4 screws are not supplied with the Controller.

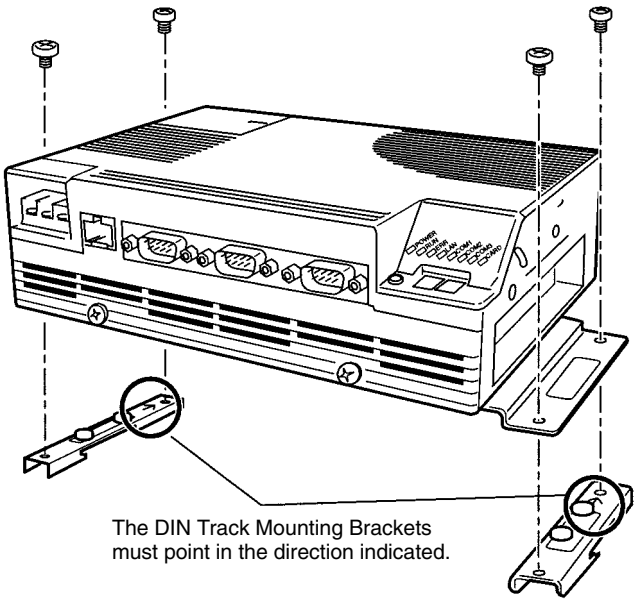

Note Be sure to attach the DIN Track Mounting Brackets in the correct orientation. If the orientation is incorrect, the Open Network Controller cannot be correctly mounted to the DIN Track.

2. Mount the Open Network Controller to the DIN Track as follows:

   a) First, insert the bottom edge of the DIN Track into the bottom (the slightly longer groove) of the DIN Track Mounting Bracket.

   b) Bring the DIN Track Mounting Bracket parallel with the DIN Track.

c) Slide the Open Network Controller downwards. The top edge of the DIN Track will fit into the groove on the top side of the Mounting Bracket.

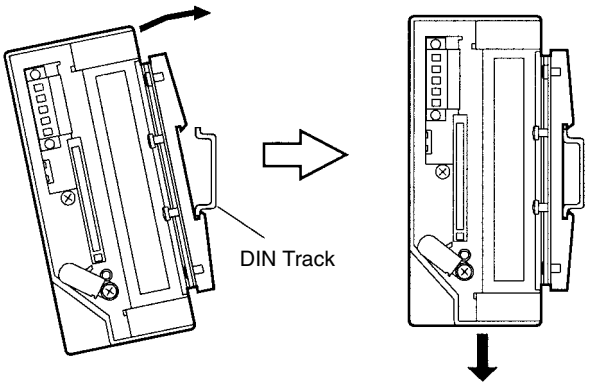

d) Secure the DIN Track Mounting Bracket and the DIN Track in place with the four screws provided.

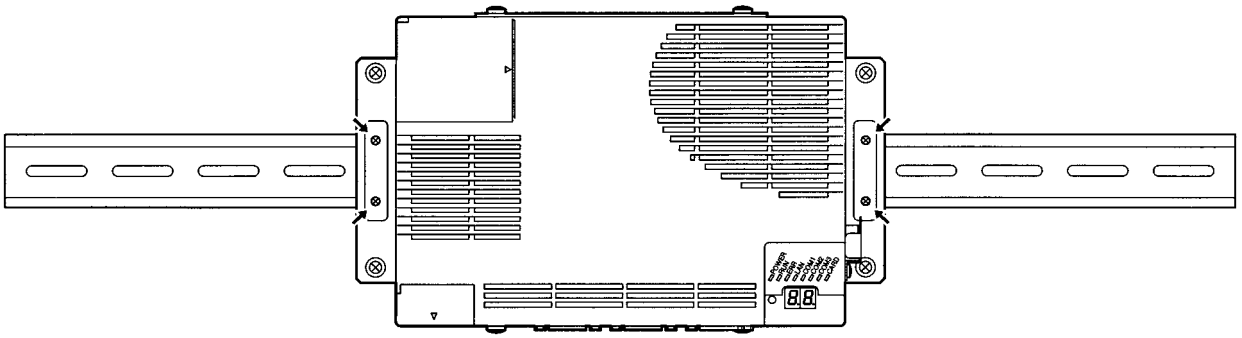

Vertical Installation

1, 2, 3... 1. Use M4 screws to join the ITNC-DIN01 DIN Track Mounting Brackets and the ITNC-AP001 Mounting Bracket for Standard Models or the ITNC-AP002 Mounting Bracket for Expansion Models together, as shown in the following diagram. M4 screws are not supplied with the Controller.

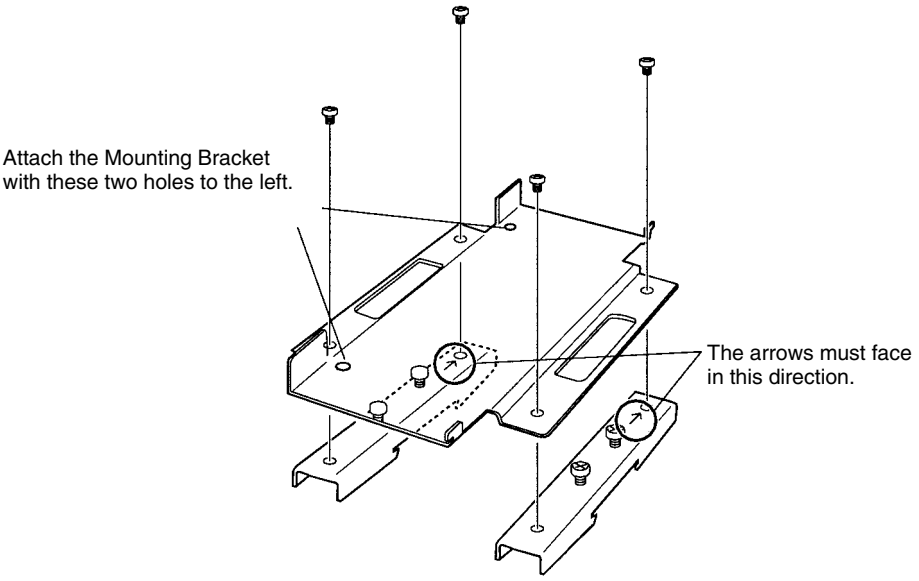

Note Be sure to attach the DIN Track Mounting Brackets in the correct orientation. If the orientation is incorrect, the Open Network Controller cannot be correctly mounted to the DIN Track.

2. Remove the two screws on the back of the Controller.

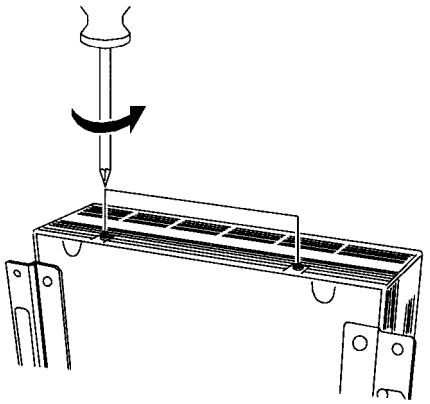

3. Mount the Mounting Bracket and DIN Track Mounting Bracket joined together to the Open Network Controller and secure them in place with the screws removed in step two.

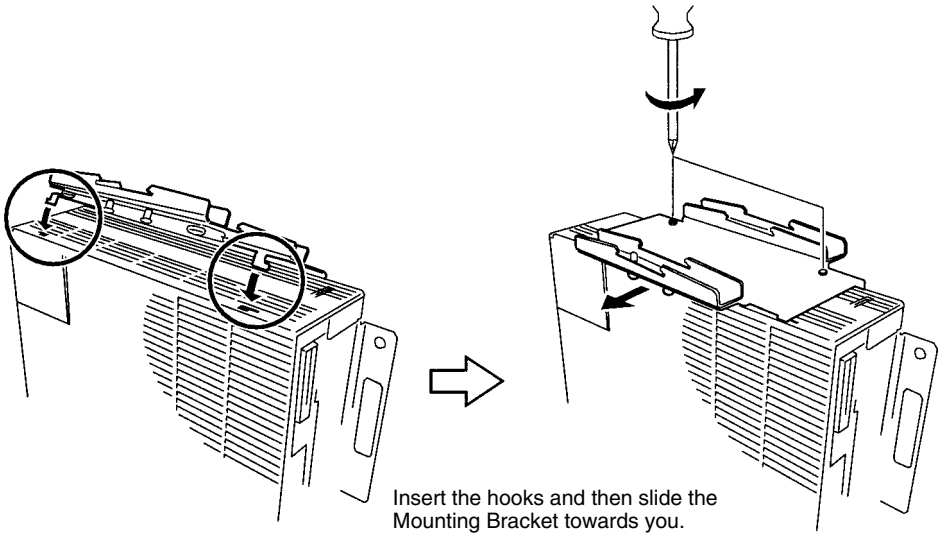

4. Mount the Open Network Controller to the DIN Track as follows:
   a) First, insert the bottom edge of the DIN Track into the bottom (the slightly longer groove) of the DIN Track Mounting Bracket.
   b) Bring the DIN Track Mounting Bracket parallel with the DIN Track.
   c) Slide the Open Network Controller downwards. The top edge of the DIN Track will fit into the groove on the top side of the Mounting Bracket.

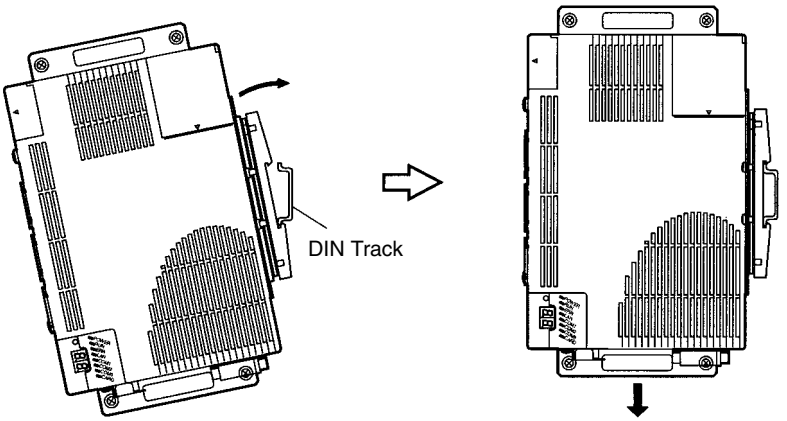

d) Secure the DIN Track Mounting Bracket and the DIN Track in place with the four screws provided.

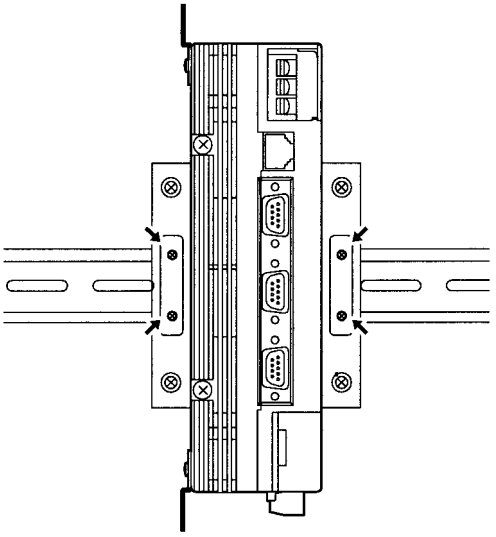

3-5 Connecting the Power Supply Cable

3-5-1 Connecting the Cable

This section explains how to connect the power supply cable. The power supply terminal block on the Open Network Controller must have 24-V DC power supplied to it.

1, 2, 3... 1. Open the terminal cover.

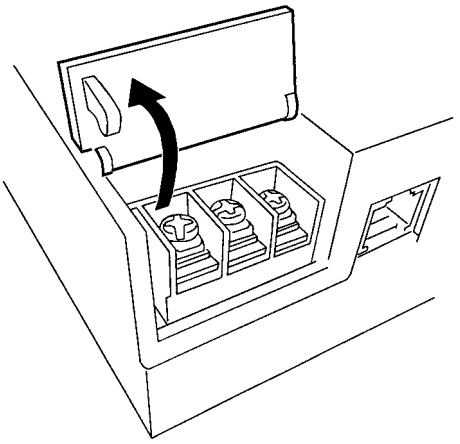

2. Loosen the power supply terminal block screws.

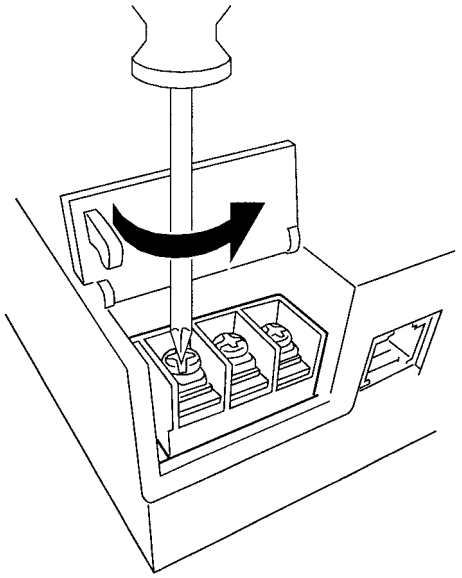

3. Connect power supply cables and ground line to the power supply terminal block. These cables must have crimp terminals.

Note Make sure no scrap wire gets caught in the terminal block.

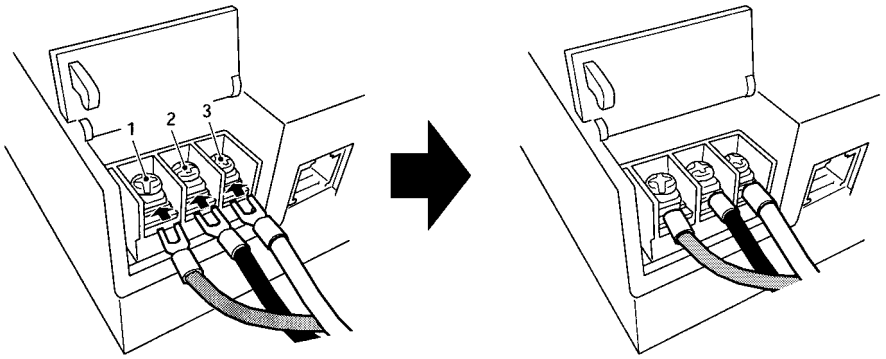

Terminal	Signal
1	+24 V DC
2	0 V
3	Functional ground terminal

DC Power Supply

Provide a 24-V DC power supply that is within the allowable voltage range (20.4 to 27.6 V DC).

Power Supply Capacity

The power consumption is 15 W or less for the ITNC-EIS01 Standard Model and ITNC-EIS01-DRM Standard Model with DeviceNet and 20 W or less for the ITNC-EIX01 Expansion Model and ITNC-EIX01-DRM Expansion Model with DeviceNet.

Note

1. Connect crimp terminals to the wires. Do not connect power lines that have simply been twisted together to the terminal block.
2. Tighten the terminal block screws to a torque of 0.8 N·m.

3. Use either forked or round crimp terminals for M3.5 screws.

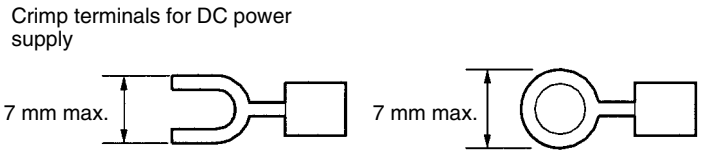

3-5-2 Wiring the Ground

The Open Network Controller has a functional ground terminal. To prevent malfunctions when there is a lot of noise and to prevent electrical shock, use an independent ground line (2 mm^2 min.) and ground to 100 Ω or less. The ground line should be less than 20 m in length.

Noise and other interference can increase if the ground is shared with other devices or connected to the wall of a building.

Use a noise filter to further reduce noise.

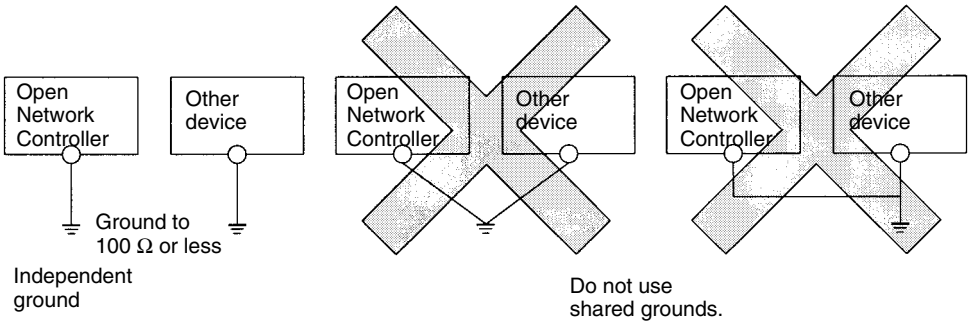

Note Ground the Controller correctly to prevent malfunction due to noise interference.

3-6 Connecting COM Port Cables

This section explains how to connect cables to COM ports 1, 2, and 3.

3-6-1 Terminal Connections to COM1

Use COM1 for connecting terminals to the Open Network Controller. Terminals cannot be connected from other ports.

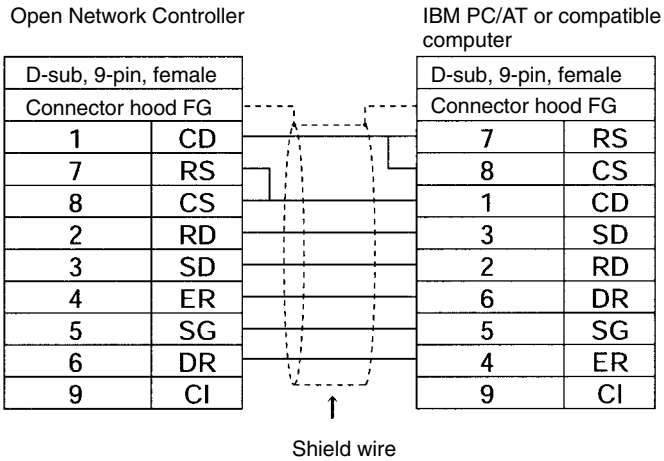

3-6-2 Host Link (SYSMAC WAY C/CV)

1:1 Connections Using RS-232C Ports (COM1 or COM2)

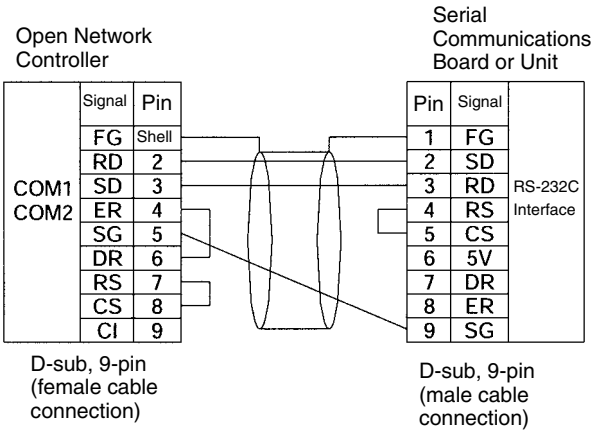

Note This example shows the connector pin layout for a CS1 Communications Board or Unit. The connector pin layout for other Host Link ports or Units will be different. Refer to the user manual for that device. Use the above signal names for reference when wiring.

1:N Connections Using RS-422A Ports (COM1 or COM2)

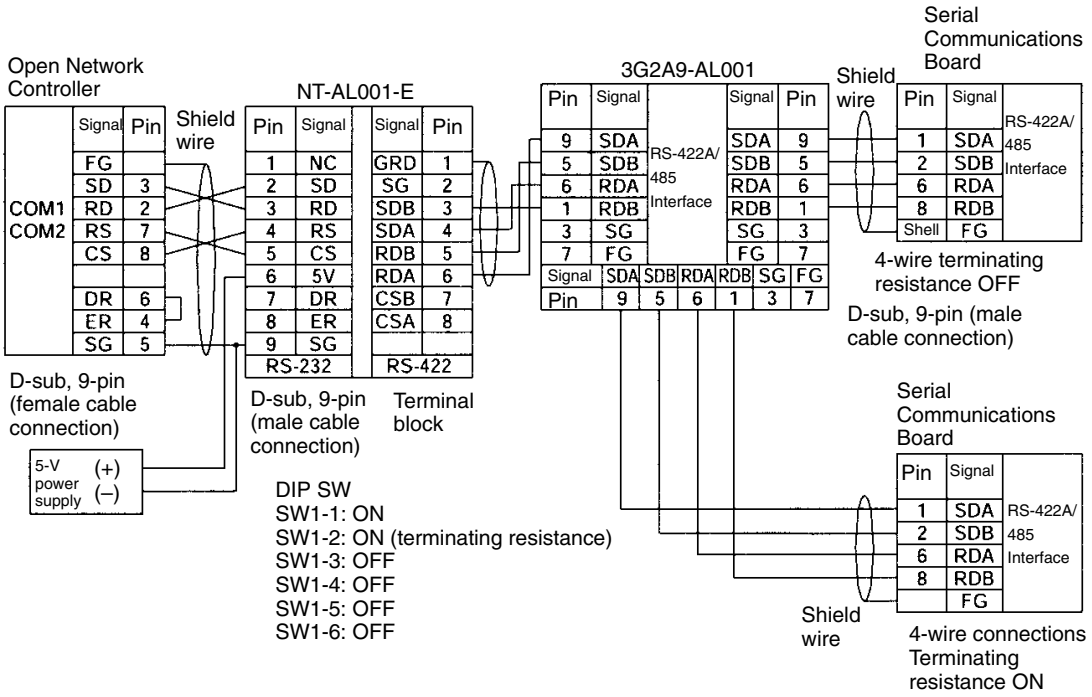

Note

1. The Open Network Controller does not have 5-V output. Provide a 5-V power supply to the NT-AL001-E Link Adapter from an external source.
2. This example shows the connector pin layout for a CS1 Communications Board or Unit. The connector pin layout for other Host Link ports or Units will be different. Refer to the user manual for that device. Use the above signal names for reference when wiring.

1:N Connections Using RS-422A Ports (COM3)

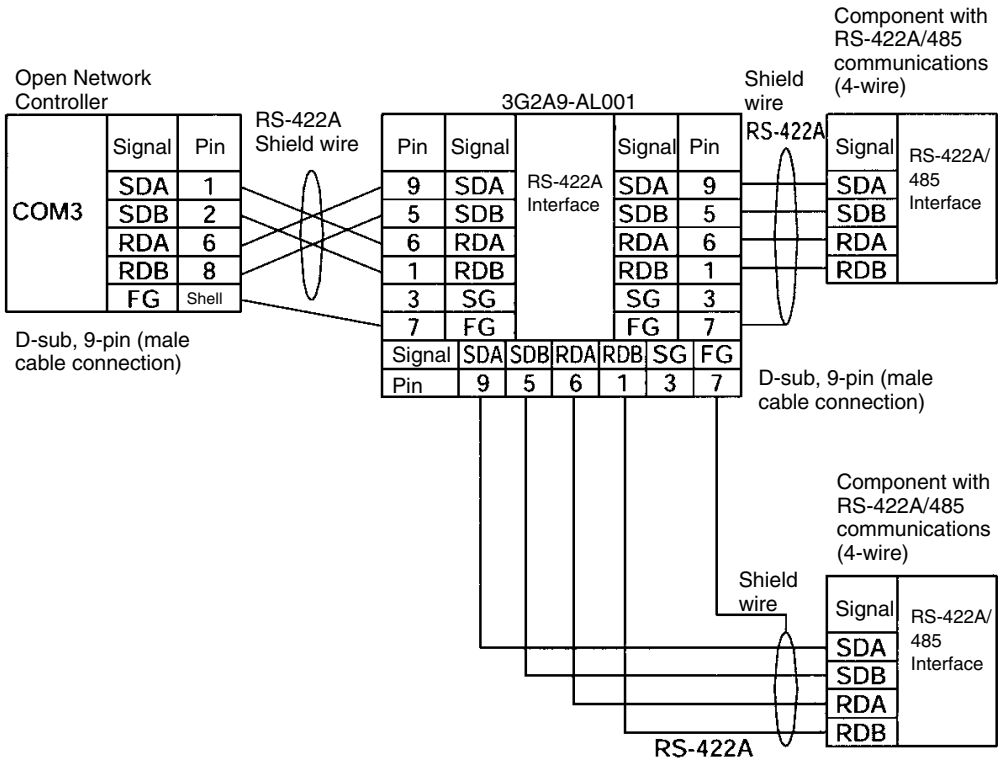

Note
1. Some devices have SDA, SDB, RDA, and RDB as well as the signal polarities in the opposite position. Check the polarity before connecting the wires.
2. The terminating resistance setting is made at the jumper pin on the Open Network Controller, shown below. The default setting is ON.

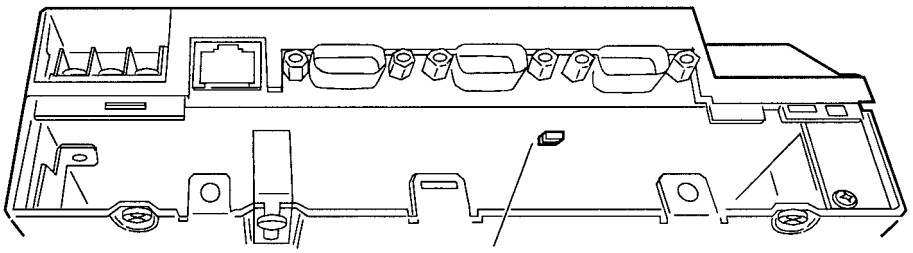

3-6-3 CompoWay/F

1:N Connections Using RS-422A Ports (COM1 or COM2)

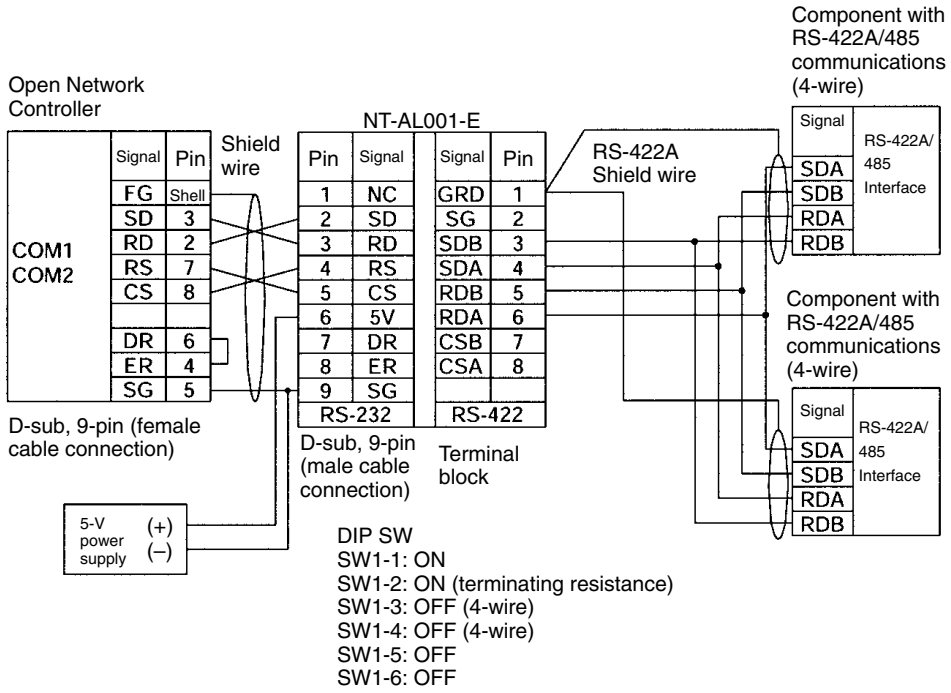

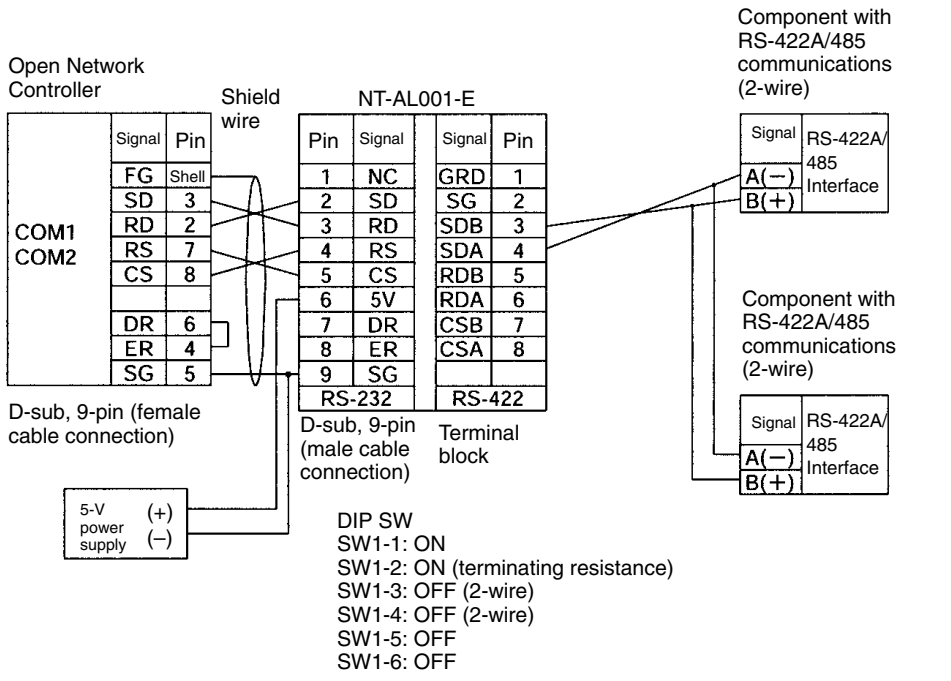

Note The Open Network Controller does not have 5-V output. Provide an 5-V DC power to the NT-AL001-E Link Adapter from an external source.

1:N Connections Using RS-485 Ports (COM3)

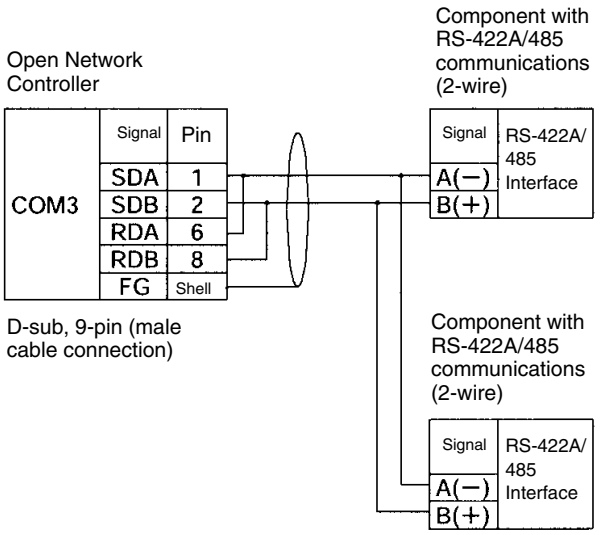

Note Some devices have SDA, SDB, RDA, and RDB as well as the signal polarities in the opposite position. Check the polarity before connecting the wires.

1:N E5CN/GN-series Connections Using RS-485 Ports (COM1 or COM 2)

The method for making a E5CN/GN-series connection using a SEKISUI SI-30A Adaptor is shown below. Pin 4 on the SI-30A's DIP switch must be turned ON.

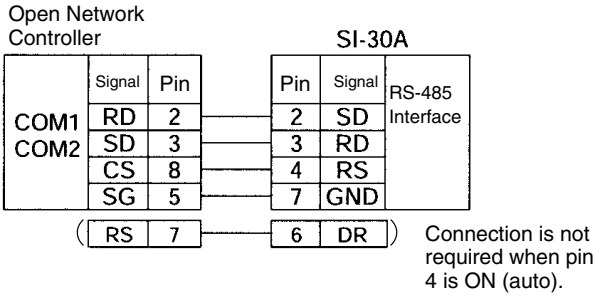

Refer to the SI-30A manual for information on connection from the SI-30A Adaptor.

3-7 Connecting DeviceNet Cables

This section explains how to connect DeviceNet cables to the Open Network Controller.

3-7-1 Connectors

Model	Specifications	Manufacturer
MSTB2.5/5-ST5.08AU	For node connections. Connector screws not supplied.	Phoenix Contact Product No.: 1752399
XW4B-05C1-H1-D	For node connection and T-branch Tap connection. Connector screws supplied with ITNC-EIS01-DRM and ITNC-EIX01-DRM Models.	OMRON
XW4B-05C4-T-D	For multi-drop node connections. Connector screws not provided.	OMRON

3-7-2 Connecting Communications Cables

This section explains how to prepare and connect the communications cables to connectors for the DeviceNet Network.

Use the following procedure to prepare and connect the communications cables to the connectors. Although some connectors are equipped with set screws and some are not, the methods used to connect the cables to the connectors are the same.

1, 2, 3... 1. Remove about 30 mm of the cable covering, being careful not to damage the shield weaving underneath. Do not remove more than about 30 mm; removing too much of the covering can result in short circuits.

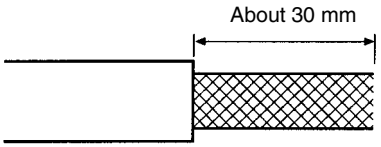

2. Carefully peel back the weaving. You will find the signal lines, power lines, and the shield wire. The shield wire will be loose on the outside of the other lines, but it is harder than the weaving and should be easily identified.

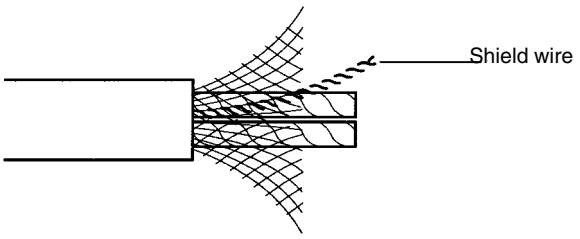

3. Remove the exposed weaving, remove the aluminum tape from the signal and power lines, and strip the covering from the signal and power lines to the

proper length for the crimp terminal connectors. Twist together the wires of each of the signal and power lines.

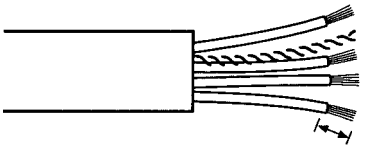

Strip to match the crimp terminals

4. Attach the crimp terminals to the lines and then cover any exposed areas of the cable and lines with electricians tape or heat-shrinking tubes.
5. Orient the connector properly, loosen the line set screws, and then insert the lines in order: Black, blue, shield, white, and then red. The wiring method is the same regardless of whether or not the connector is equipped with set screws.

Connector with Set Screws

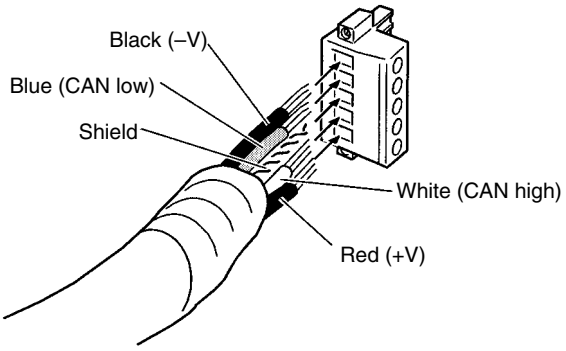

Note Be sure the line set screws are sufficiently loosened before attempting to insert the lines. If these screws are not loose, the lines will enter the gaps in the back of the connector and will not lock properly.

There are colored stickers provided on the Master and Slaves that match the colors of the lines to be inserted. Be sure that the colors match when wiring the connectors. These colors are as follows:

Color	Signal
Black	Power line, negative voltage (–V)
Blue	Communications line, low (CAN low)
---	Shield
White	Communications line, high (CAN high)
Red	Power line, positive voltage (+V)

6. Tighten the line set screws for each line in the connector. Tighten the screws to 0.25 to 0.3 N · m.

You will not be able to tighten these screws with a normal screwdriver, which narrows to a point at the end. You will need a screwdriver that is consistently thin for the entire length.

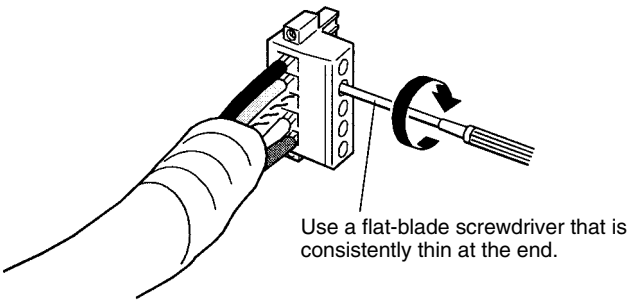

Note The following screwdriver is available from OMRON.

Model Number: XW4Z-00C

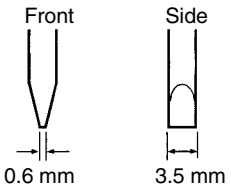

Multi-drop Connections with Accessory Connector (Thin Cables Only)

The connectors provided with the Controllers can be used for a multi-drop connection as long as thin cables are being used, just insert both lines into the same hole in the connector. Be sure to use crimp connectors on both lines.

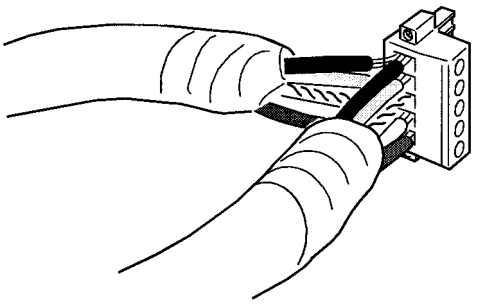

Multi-drop Connections with Special Connector (Thin or Thick Cables)

A multi-drop wiring connector (sold separately) can be used to wire a multi-drop connector for either thin or thick cables. This multi-drop wiring connector is required to wire a multi-drop connection with thick cables, which are too thick for two lines to fit into the connector provided with the Controllers.

The multi-drop wiring connector cannot always be used with Master Units or the CQM1 I/O Link Units because it may come into contact with the Units mounted next to the Master Unit or the CQM1 I/O Link Unit. If this happens, use a T-branch Tap to wire the connection.

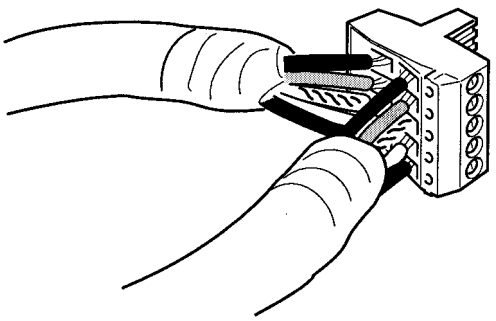

Note

1. Before connecting the communications cables, turn OFF the power supply to all PCs, Slaves, and communications power supplies.
2. Use crimp terminals for wiring. Connecting bare twisted wires can cause the cables to come off, break, or short circuit, most likely resulting in incorrect operation and possible damage to the Units.
3. Use suitable crimp tools and crimping methods when attaching crimp terminals. Consult the manufacturer of the tools and terminals you are using. Inappropriate tools or methods can result in broken wires.
4. Be extremely careful to wire all signal lines, power lines, and shield wire correctly.
5. Tighten all set screws firmly. Tighten to a torque of 0.25 to 0.3 N·m.
6. Wire the signal lines, power lines, and shield wire so that they do not become disconnected during communications.
7. Do not pull on communications cables with excessive force. They may become disconnected or wires may break.
8. Allow leeway so that communications cables do not have to be bent further than natural. The Cables may become disconnected or wires may break if the cables are bent too far.
9. Never place heavy objects on communications cables. They may break.
10. Double-check all wiring before turning ON the power supply.

3-7-3 Connecting Communications Cables to T-branch Taps

This section shows how to connect a communications cable with a connector attached to a T-branch Tap. There are two kinds of T-branch Taps. One makes a single branch and the other makes three branches, but the cable connections are the same for both.

The connectors indicated by asterisks in the following diagrams have the least resistance and these connectors should be used for the trunk line connections. When using a T-branch Tap on a drop line, we recommend connecting the longest drop line to these connectors.

DCN1-1C

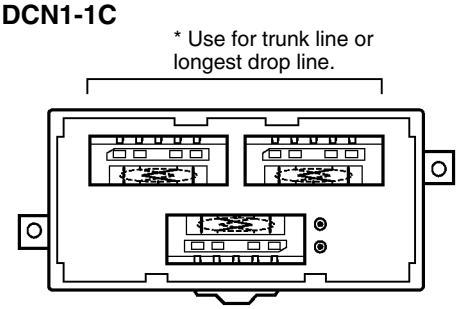

DCN1-3C

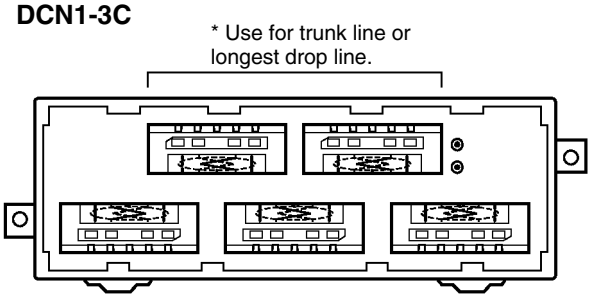

Align the cable connector with the socket on the T-branch Tap as shown in the following diagram and fully insert the connector into the socket. Tighten the set

screws to secure the connection. Tighten the screws to a torque of 0.25 to 0.3 N·m.

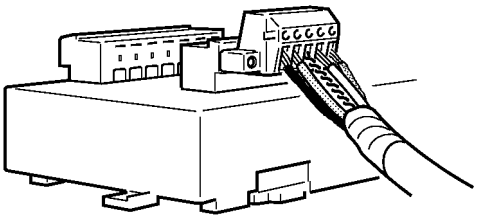

Note To avoid damaging the cable or breaking wires, don't pull on the cable or bend it too sharply when connecting it to the T-branch Tap. Also, never put heavy objects on top of the cable.

3-7-4 Connecting Terminating Resistors

Terminating Resistors must be connected at each end of the trunk line. This section shows how to connect the Terminating Resistors.

T-branch Tap Terminating Resistor

A terminating resistor is included with the T-branch Tap. Clip the leads on the resistor to about 3 mm and insert it into the T-branch Tap as shown in the following diagram. The resistor can face in either direction.

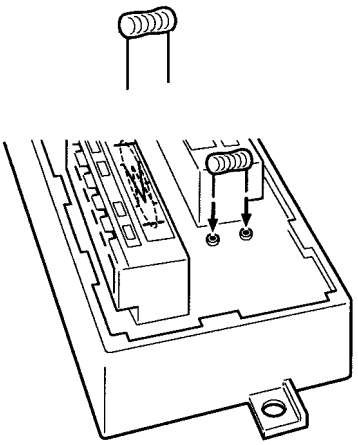

Terminal-block Terminating Resistor

A terminating resistor is built into the Terminal-block Terminating Resistor. To connect the cable to the Terminating Resistor, attach standard M3 crimp terminals to the signal wires and securely screw the terminals to the Terminal-block Terminating Resistor. Tighten to a torque of 0.3 to 0.5 N·m.

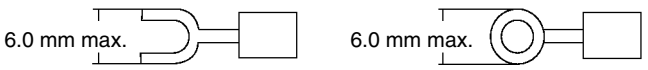

Note To avoid damaging the cable or breaking wires, don't pull on the cable or bend it too sharply when connecting it to the terminal block. Also, never put heavy objects on top of the cable.

3-7-5 Connecting Communications Cables to Nodes

This section shows how to connect a communications cable with a connector attached to a Master or Slave.

Align the cable connector with the socket on the node as shown in the following diagram and fully insert the connector into the socket. Tighten the set screws 0.25 to 0.3 N · m to secure the connection.

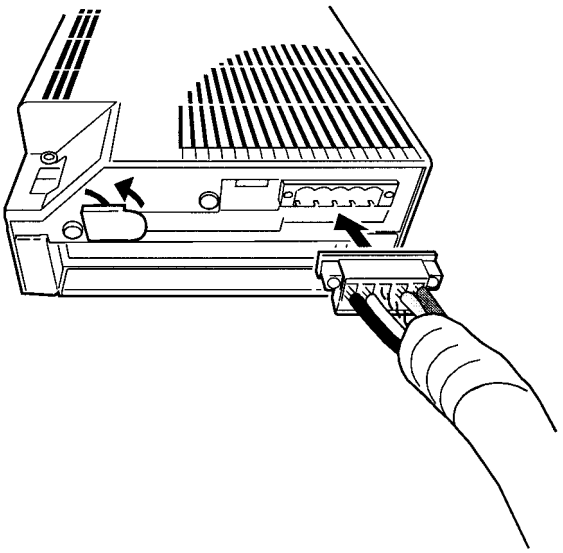

Note To avoid damaging the cable or breaking wires, don't pull on the cable or bend it too sharply when connecting it to the terminal block. Also, never put heavy objects on top of the cable.

3-8 Connecting Ethernet Cables

This section explains how to connect Ethernet cables to the Open Network Controller.

The 10Base-T cable is inserted into the Ethernet connector on the Open Network Controller.

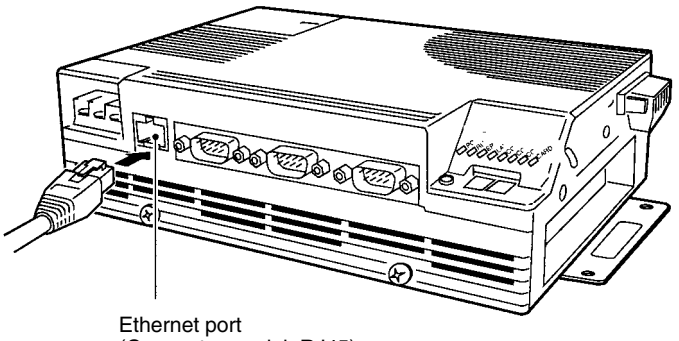

Ethernet port
(Connector model: RJ45)

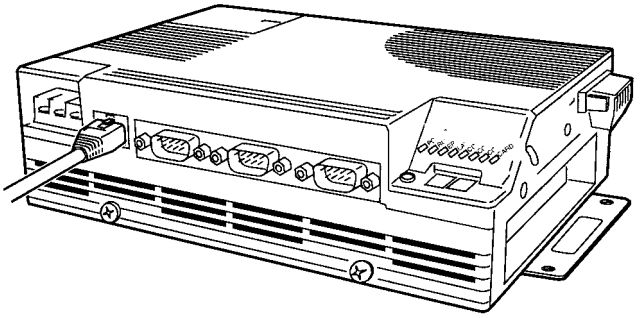

3-9 Handling Memory Cards

This section explains how to mount, remove, and format Memory Cards. The Open Network Controller supports Memory Cards formatted in MS-DOS or QNX.

3-9-1 Memory Card Models

Use OMRON Memory Cards for CS1-series PLCs.

Model	Specifications
HMC-EF372	30 MB
HMC-EF672	64 MB
HMC-EF282	256 MB
HMC-EF582	512 MB

Note

1. When using a memory card produced by another manufacturer, check the environmental resistance of the cards.
2. Never turn OFF the power supply to the Open Network Controller while accessing the Memory Card. If the power is turned OFF, the Card may be damaged and become unusable.

Use a HMC-AP001 Memory Card Adaptor when inserting a Memory Card into the PCMCIA slot of a personal computer or other device.

3-9-2 Mounting and Removing Memory Cards

Note Always secure the memory card bracket when a Memory Card is inserted. If the bracket is not used, the Memory Card may become dislodged due to vibration or other causes.

1, 2, 3... 1. Loosen the screw on the bracket

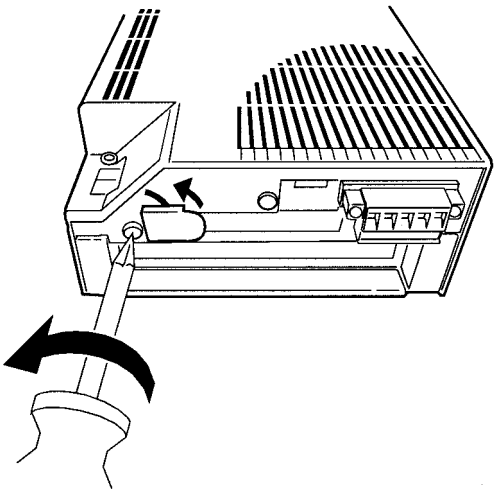

2. Insert a Memory Card it into the card slot. Be sure to insert it firmly and in the proper orientation. The Memory Card must have been previously formatted in the QNX or MS-DOS format. (QNX formatting is possible for a Memory Card in the slot by logging in from Ethernet or a serial connection.)

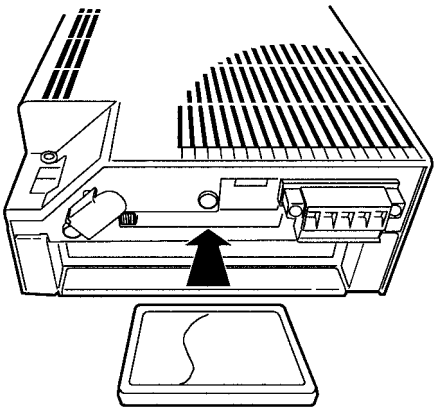

3. Press the card switch. This prompts the operating system to recognize the Memory Card and mount it. The CARD indicator will light.

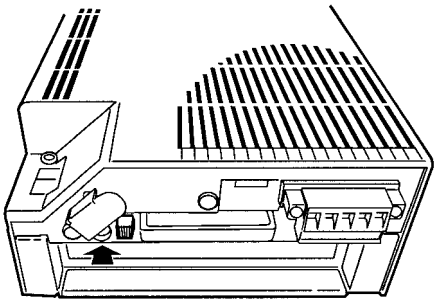

4. Twist the card bracket to position it over the Memory Card and screw the bracket firmly in place.

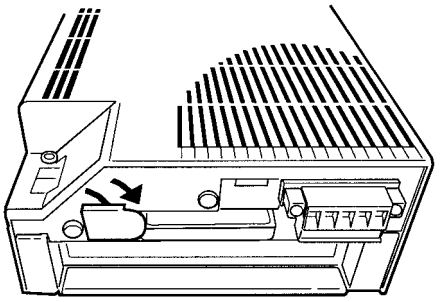

Installation Directory

The directory where the Memory Card will be mounted depends on the format.

When the card switch is pressed, the Memory Card will be automatically mounted in one of the following directories.

Format	Directory
QNX	/hd
MS-DOS	/dos/c

Unmounting and Removing Memory Cards

This section explains how to unmount and remove the Memory Card.

Note

1. Before removing the Memory Card, always press the card switch and unmount the Card.
2. Check that the CARD indicator is not lit before pressing the card eject button.

1, 2, 3...

1. Loosen the screw on the card bracket and twist the bracket as shown in the diagram.

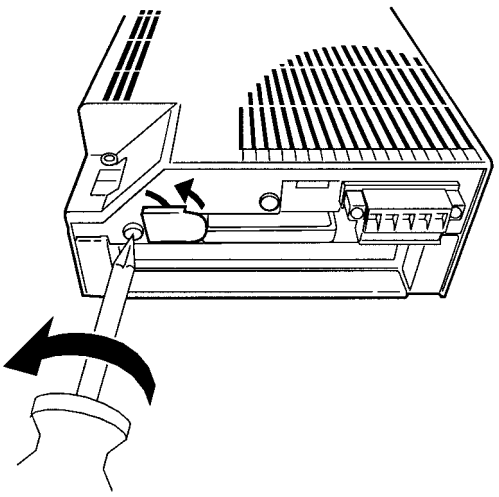

2. Press the card switch.
   - When the card switch is pressed, the Memory Card will be automatically unmounted.

• The CARD indicator will go out.

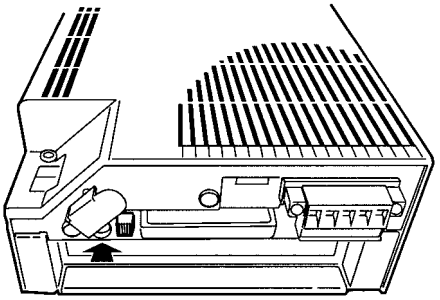

3. Check that the CARD indicator is not lit and press the card eject button.

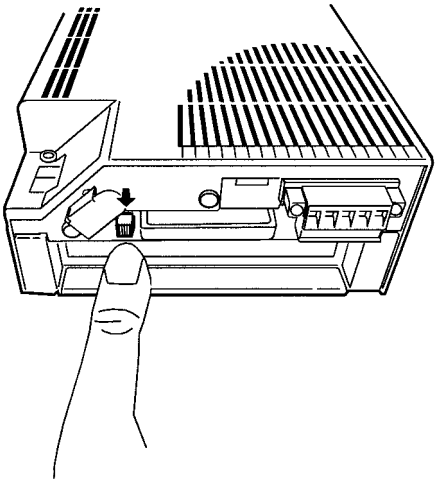

3-9-3 Formatting Memory Cards

This section explains how to format a Memory Card in QNX.

1, 2, 3...

1. Insert a Memory Card into the card slot.

   Note Do not press the card switch at this point.

2. Log onto the Open Network Controller via Ethernet or a serial connection. Refer to *4-2 Logging onto the Open Network Controller* for details.
3. From the console, input the following:

   `#cardQnxFormat1`↵

   The screen shown below will be displayed.

```
Ignore   Next   Prev  1  2  3  4  Change   Delete   Boot  Unboot   Restore   Loader   Save  Quit

          ______OS______   Start        End        ______Number ______    Size        Boot
          name      type   Cylinder     Cylinder   Cylinders    Blocks

—>   1.   -----------  (------)  ----------  ----------  ----------  ----------  ----------
     2.   -----------  (------)  ----------  ----------  ----------  ----------  ----------
     3.   -----------  (------)  ----------  ----------  ----------  ----------  ----------
     4.   -----------  (------)  ----------  ----------  ----------  ----------  ----------

  Choose a partition by typing the partition number OR moving the pointer with the UP/DOWN
  arrows.
  Then, choose one of the actions on the top line of the screen.

                                                  Drive:    /dev/hd0

Size      :  7872 Kbytes                          Config:        2  Heads
Loader    :        QNX                                          32 Sectors/track
                                                               246 Cylinders

                                                  Last cylinder is 245.
```

4. Press the S Key.
5. From the console, input the following:

   `#cardQnxFormat2`

Press the Card switch to mount the Memory Card. The Memory Card will be automatically mounted on one of the following directories.

Format	Directory
QNX	/hd
MS-DOS	/dos/c

SECTION 4
Software Settings

This section describes the various methods that can be used to set the contents of the environment settings files for the Open Network Controller.

4-1 Overview 60
4-2 Logging onto the Open Network Controller 61
4-2-1 Using COM1 61
4-2-2 Using Ethernet 63
4-3 Using the ONC_wizard Setting Tool 66
4-3-1 Overview 66
4-3-2 Starting and Exiting 66
4-3-3 Backing Up Settings 67
4-3-4 Menus 68
4-3-5 Basic Operating Procedures 70
4-3-6 SYSTEM SETUP 73
4-3-7 RESOURCE SETUP 74
4-3-8 FinsGateway SETUP 74
4-3-9 ETN SETUP 76
4-3-10 CLK SETUP 76
4-3-11 SYSMAC SETUP 77
4-3-12 DeviceNet SETUP 78
4-3-13 HLK SETUP 80
4-3-14 RUT SETUP 81
4-3-15 exit 81
4-4 Making Settings with a vi Editor 82
4-5 Transferring Settings Files with FTP 82
4-6 Setting File Descriptions 83
4-6-1 Setting Files 83
4-6-2 Host IP Addresses 84
4-6-3 Host Name and Subnet Mask 84
4-6-4 IP Router 84
4-6-5 Startup Services and Network Settings 85
4-6-6 ETN_UNIT Settings 90
4-6-7 DRM_UNIT Settings 90
4-6-8 DeviceNet Scan List 95
4-6-9 Controller Link Settings 96
4-6-10 HLK_UNIT Settings 97
4-6-11 Host Link Address Tables 98
4-6-12 SYSMAC_UNIT Settings 99
4-6-13 SYSMAC_UNIT Driver Settings 100
4-6-14 SYSMAC Board Allocations in Event Memory 101
4-7 Setting Examples 102
4-7-1 Configurations 102
4-7-2 Ethernet Settings 103
4-7-3 Startup Services 103
4-7-4 Ethernet NP Settings 108
4-7-5 DeviceNet NP Settings 109
4-7-6 Scan List 110
4-7-7 Controller Link NP Settings 112
4-7-8 HLK_UNIT Settings 113

4-1 Overview

Editing Settings Files

The software settings for the Open Network Controller, including those for the NPs, are made by editing settings files. The following four methods can be used.

1, 2, 3...

1. Use the ONC_wizard setting tool on the Open Network Controller.
2. Use the vi editor on the Open Network Controller to edit the settings files directly.
3. Use a text editor on a personal computer to edit the settings files and then transfer the files to the Open Network Controller using FTP.
4. Use the Java setting tool to make the settings

The first two methods are achieved by logging onto the Open Network Controller either by using Telnet via an Ethernet connection or by using a VT100 terminal (e.g., a HyperTerminal) connected to COM1. The third method requires making FTP settings in the Open Network Controller, and is not possible by connecting a terminal to COM1.

- Refer to *4-2 Logging onto the Open Network Controller* for login procedures.
- Refer to *4-3 Using the ONC_wizard Setting Tool* for instructions on using ONC_wizard.
- Refer to *4-4 Making Settings with a vi Editor* and *4-5 Transferring Settings Files with FTP* for FTP procedures.

A Memory Card is required for the fourth method. Download the Web Service Software version 2.0 and the Java setting tool from the ONC website and install them. Refer to the *Web Service Software Version 2.0 Operation Manual* for operating instructions. (The *Web Service Software Version 2.0 Operation Manual* can also be downloaded from the ONC website.)

Note Refer to the following Web site for the most recent information on software for Open Network Controllers.
http://www.plcsoft.ne.jp/it/onc/english/index.html

Settings Files

The following table lists the settings files.

Settings	File name
IP addresses	/etc/hosts
Subnet mask	/etc/netstart
Host names	/etc/hosts /etc/netstart
IP routing	/iproute
Startup services, local and relay network tables, COM port services	/etc/FgwQnx/FgwQnx.ini
ETN_UNIT (Ethernet NP)	/etc/FgwQnx/FgwQnxEtn.ini
CLK_UNIT (Controller Link NP)	/etc/FgwQnx/FgwQnxClk.ini
SYSMAC_UNIT (SYSMAC Board connection NP)	/etc/FgwQnx/FgwQnxSysmac.ini
SYSMAC_UNIT driver	/etc/FgwQnx/FgwQnxSysmacDriver.ini
SYSMAC memory allocations in event memory	/etc/FgwQnx/FgwQnxSysmacMapping.ini
DRM_UNIT (DeviceNet NP)	/etc/FgwQnx/FgwQnxDrm.ini
DeviceNet scan list	/etc/FgwQnx/scanlist.ini
HLK_UNIT (C-series Host Link, CV-series Host Link, and CompoWay/F NP)	/etc/FgwQnx/FgwQnxHlk.ini
Host Link address tables (C-series Host Link, CV-series Host Link, and CompoWay/F NP)	/etc/FgwQnx/HlkNetTbl.ini

Note Refer to *4-6 Settings File Descriptions* for details on the settings files.

4-2 Logging onto the Open Network Controller

This section describes how to log onto the Open Network Controller by connecting to COM1 and using a HyperTerminal or by connecting to the Ethernet port and using Telnet.

4-2-1 Using COM1

This section describes how to log onto the Open Network Controller by connecting to COM1 and using a HyperTerminal. The HyperTerminal is normally provided as an accessory with Windows.

DIP Switch Settings

Turn ON pin 1 on DIP switch 2.

Cable Connection

Connect a serial port on the computer with the COM1 port on the Open Network Controller. One of the following OMRON cables is recommended.

XW2Z-200V (D-sub, 9-pin, female, 2 m)
XW2Z-500V (D-sub, 9-pin, female, 5 m)

Refer to *3-6 Connecting COM Port Cables*.

HyperTerminal Startup and Settings

1, 2, 3...

1. Start the HyperTerminal on your computer.
2. Select ***File*** and then ***Properties.*** A window like the following example from Windows NT V4 will appear.

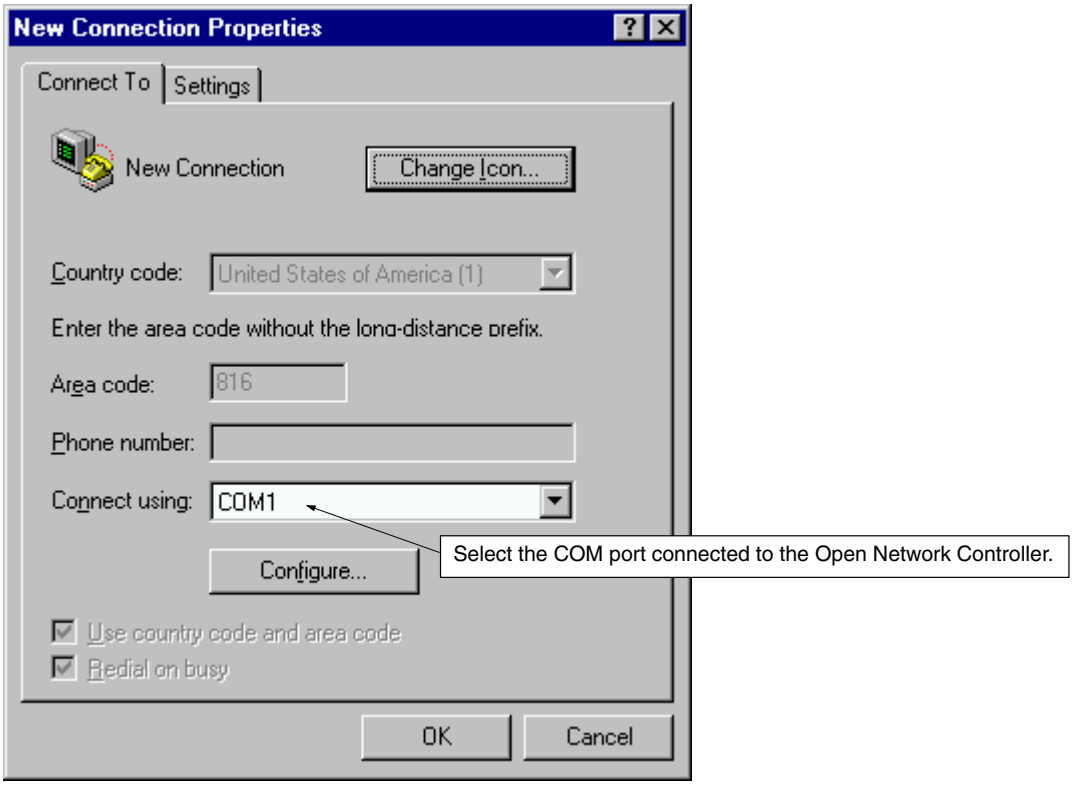

3. Set the COM port to which the Open Network Controller is connected (as shown in the above diagram) and click the **Configure** Button. Communications settings will be displayed.

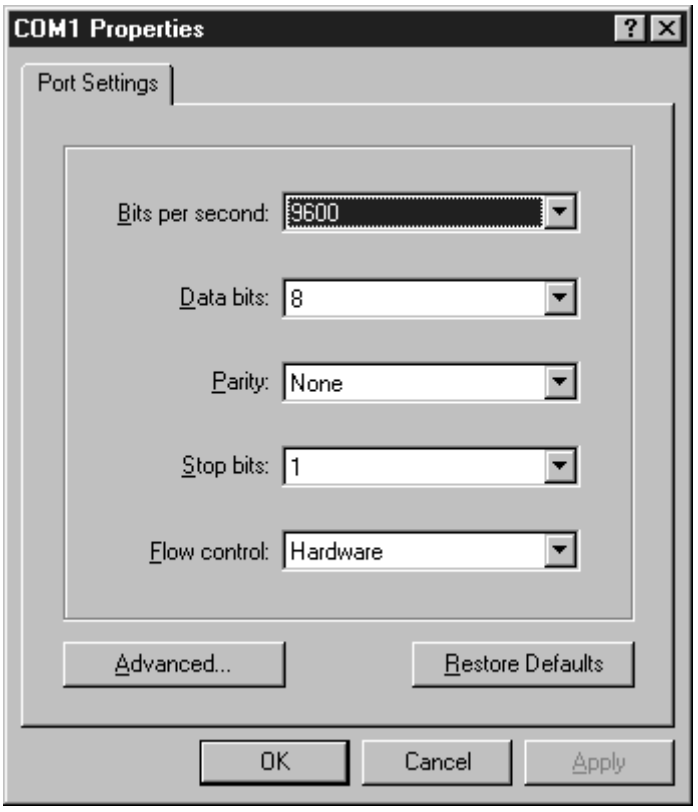

4. Apply the configuration and port settings by clicking the **OK** Button.
5. Be sure the Open Network Controller is physically connected and turn ON the power to the Controller.
6. Select ***Call*** and then ***Connect*** from the HyperTerminal. If a normal connection is made, the following message and prompt will appear.

```
Welcome to QNX 4.25
Copyright (c) QNX Software Systems Ltd. 1982,1998
login:
```

Login

You can log onto the Open Network Controller as **root** using the default password **OMRON**.

1, 2, 3...

1. Input as shown in the following display.

```
login: rootr
password: OMRONr   <- The password will not be displayed when it is input.
Last login: Wed Jan 06 08:40:09 1999 on //1/dev/ttyp0
Wed Jan 06 09:48:24 1999
#   <- This prompt will appear if you have logged in successfully
```

2. Check the setting of the Open Network Controller terminal by inputting as follows:

```
# setr
```

The environment setting of the Open Network Controller will be displayed. “TERM=vt100” should be displayed. If it is not, then input as follows:

```
# TERM=vt100r
```

Changing the Password

The password can be changed using the following procedure.

1, 2, 3...

1. Input “passwd” and press the Enter Key. The following message and prompt will appear.

```
# passwdr
changing password for root
New password:
```

2. Input the new password and press the Enter Key.

```
Retype new password:
```

3. Input the new password again and press the Enter Key. If the password is the same both times, the normal prompt will be displayed.

4-2-2 Using Ethernet

This section describes how to log onto the Open Network Controller by connecting to the Ethernet port and using Telnet. Telnet is normally provided as an accessory with Windows.

Cable Connection

Connect a 10Base-T Ethernet cable to the Ethernet port on the Open Network Controller. Refer to *3-8 Connecting Ethernet Cables* for information on physically connecting to Ethernet.

Open Network Controller IP Address Settings

The IP address of the Open Network Controller is set to 10.0.0.1 and the subnet mask is set to 255.0.0.0 by default.

If you need to change the IP address of the Controller before using Telnet, connect using the COM1 port and change the addressing using a HyperTerminal. Refer to *4-3-6 SYSTEM SETUP* for details.

Computer IP Address Settings

Also set the IP address of the computer. The procedure for Window 95/98 is given next as an example.

1, 2, 3... 1. Open the ***Network*** settings on the control panel and click the ***Configuration*** tab.

2. Select ***TCP/IP*** and click the **Properties** Button.

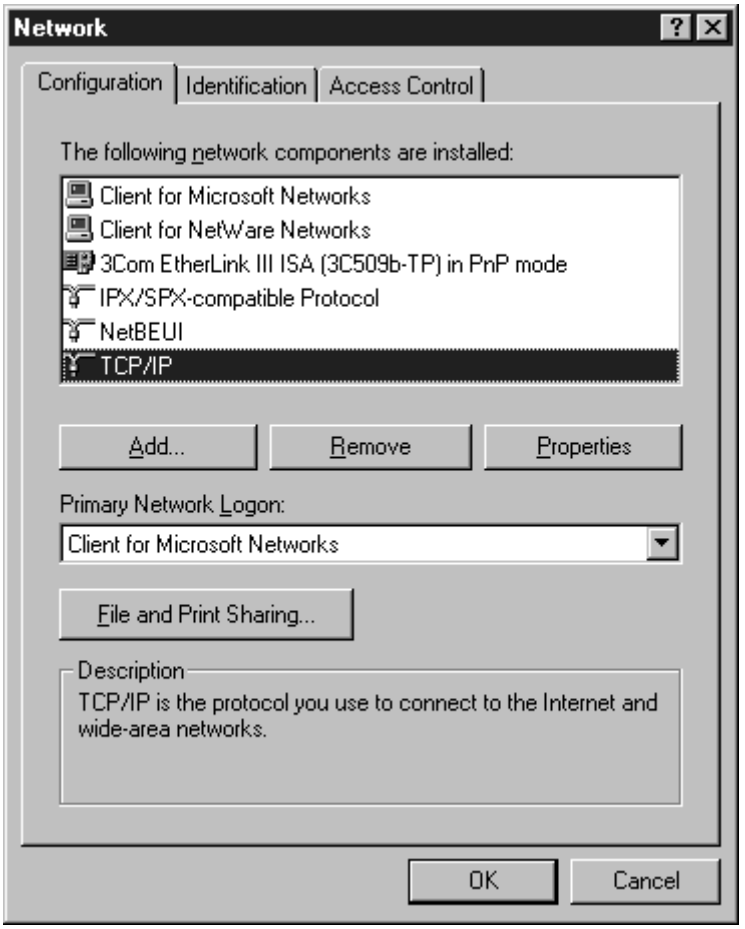

3. Click the ***IP Address*** tab and specify an IP address directly.

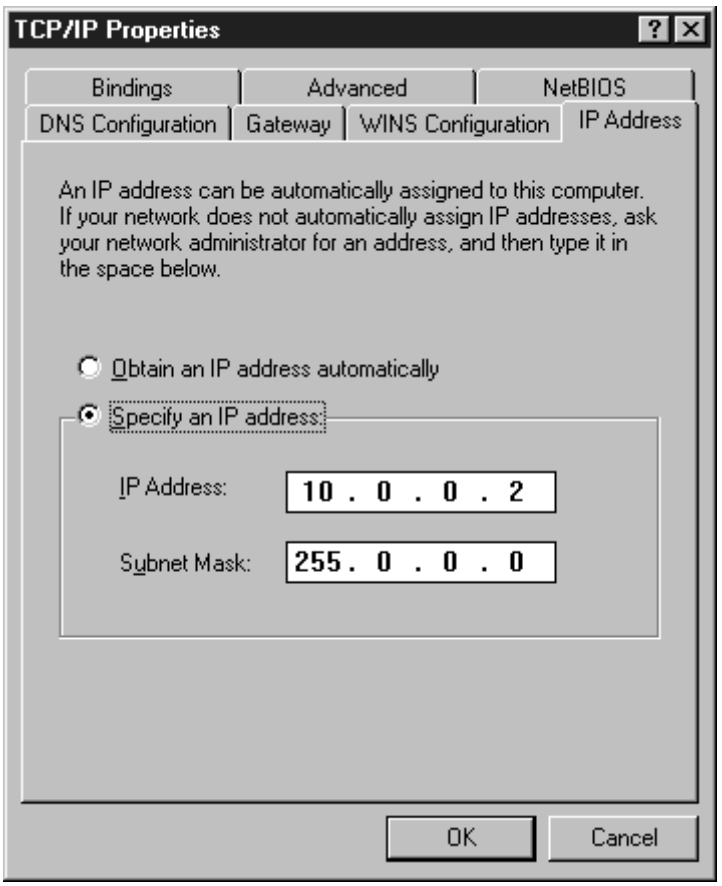

Telnet

The following procedure shows how to use Telnet to connect to the Open Network Controller from a Windows computer.

1, 2, 3...

1. Select ***Start*** and then ***Run***.
2. Input as shown in the following diagram.

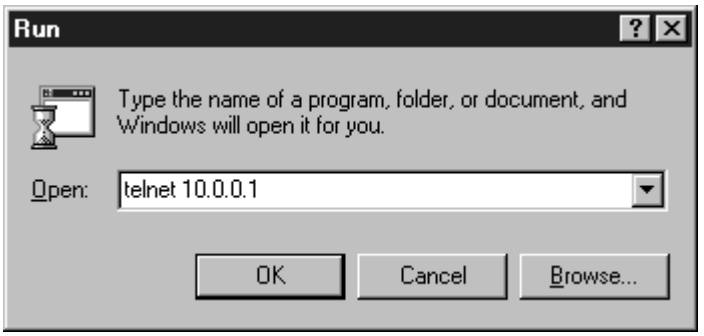

3. Click the **OK** Button. If a normal connection is made, the following message and prompt will appear.

```
Welcome to QNX 4.25
Copyright (c) QNX Software Systems Ltd. 1982,1998
login:
```

Login

You can log onto the Open Network Controller as **root** using the default password **OMRON**.

Input as shown in the following display.

```
login: root↵
password: OMRON↵   ← The password will not be displayed when it is input.
Last login: Wed Jan 06 08:40:09 1999 on //1/dev/ttyp0
Wed Jan 06 09:48:24 1999
#   ← This prompt will appear if you have logged in successfully
```

The password can be changed if desired. Refer to page 63 for the procedure.

4-3 Using the ONC_wizard Setting Tool

This section describes how to use ONC_wizard to make software settings.

4-3-1 Overview

ONC_wizard

ONC_wizard is a setting tool that will let you change the settings in the settings files using conversational window displays. This provides an easy way to change the contents of settings files without editing them directly or having to transfer them from a computer to the Open Network Controller.

Basic Operation

- When ONC_wizard is started, it makes copies of the settings files to create a temporary file (/usr/tmp).
- Changes made while using ONC_wizard are actually made in the temporary files.
- When ***Save Changes and exit*** is selected from the Exit Menu after completing settings, the contents of the temporary files will be checked and, if no errors are found, the original files will be overwritten with the contents of the temporary files before ONC_wizard ends.
- Any changes in the settings will be made valid the next time the Open Network Controller is started.

4-3-2 Starting and Exiting

Starting

1, 2, 3...

1. Log onto the Open Network Controller as **root** using one of the methods described in *4-2 Logging onto the Open Network Controller.*
2. Enter ***ONC_wizard*** and press the Enter Key at the prompt. (Inputs are case sensitive.)

   ONC_wizard will be started and the following menu will appear.

```
Setup Utility Ver.1.00 [MAIN MENU]
----------------------------------------------------
 1. SYSTEM SETUP
 2. RESOURCE SETUP
 3. FinsGateway SETUP
 4. ETN SETUP
 5. CLK SETUP
 6. SYSMAC SETUP
 7. DeviceNet SETUP
 8. HLK SETUP
 9. RUT SETUP
10. exit
----------------------------------------------------
Number Selection(1-10,n:next,p:prev,q:quit):
```

Exiting

1, 2, 3... 1. Select ***10. exit*** from the Main Menu by entering "10" and pressing the Enter Key. The following menu will appear.

```
Setup Utility Ver.1.00 [EXIT MENU]
-------------------------------------------------
 1. Discard Changes & exit
 2. Save Changes & exit
 3. Make Temporary File & exit
 4. MainMenu
-------------------------------------------------
Number Selection(1-10,n:next,p:prev,q:quit):
```

2. Select ***2. Save Changes & exit*** from the Exit Menu by entering "2" and pressing the Enter Key.

   The contents of the settings will be checked and, if no errors are found, the original settings files will be overwritten with the contents of the temporary files before ONC_wizard ends. The temporary files will be deleted.

   - If ***1. Discard Changes & exit*** is selected, the contents of the original settings files will not be changed, the temporary files will be deleted, and ONC_wizard will end.
   - If ***3. Make Temporary File & exit*** is selected, the temporary files will be saved as *.onc in /usr/tmp and ONC_wizard will end. These temporary files can be edited with a vi editor or standard computer text editor to create other settings files.
   - If ***4. MainMenu*** is selected, the Main Menu will be displayed.

Setting Errors

The following will be performed if one or more errors are discovered when checking settings.

- The errors will be recorded in a SetupErr.txt file in /usr/tmp.
- The temporary files containing the errors will be saved (i.e., not deleted).

Use the contents of SetupErr.txt to correct the settings.

Warning Messages

The following type of messages will be displayed on-screen and recorded in the error file when errors are discovered for ONC_wizard and ONC_check errors.

```
FgwQnx.ini.onc
  Warning Not Setting!    [RouteTable] RelayNetworks
FgwQnxSysmacMapping.ini.onc
  Warning Not Setting!    [sysmacDrv0]
scanlist.ini.onc
  Warning Not Setting!    []
HlkNetTbl.ini.onc
  Warning Not Setting!    [HLK2]
```

The above messages indicate that required settings are missing. These settings are not set to default values and must be set by the user. If the settings are not required for your application, the above warnings can be ignored.

4-3-3 Backing Up Settings

The following procedure can be used to back up the settings file.

1, 2, 3... 1. Start ONC_wizard.
2. Select ***10. exit*** from the Main Menu and then ***3. Make Temporary File & exit.*** Temporary files will be saved as *.onc in /usr/tmp.
3. Transfer the above files to the computer using FTP and store them in a safe location.

4-3-4 Menus

The ONC_wizard menus and the files that they affect are listed in the following table.

Main Menu	Usage	Menu item	Settings	Settings file
1. SYSTEM SETUP	Ethernet settings	1. HostName	Local node host	/etc/netstart
		2. SubnetMask	Subnet mask	
		3. IpRoute	IP router addresses	/iproute
		4. Host File	Host IP addresses	/etc/hosts
		5. exit	Goes to Main Menu.	---
2. RESOURCE SETUP	COM port settings	1. COM PROCESS COUNT	Number of COM ports	/etc/FgwQnx/FgwQnx.ini
		2. COM1 PROCESS	NP allocation to COM1	
		3. COM2 PROCESS	NP allocation to COM2	
		4. COM3 PROCESS	NP allocation to COM3	
		5. exit	Goes to Main Menu.	---
3. FinsGateway SETUP	FinsGate-way settings	1. StartService	Startup services	/etc/FgwQnx/FgwQnx.ini
		2. UnitID	Unit addresses	
		3. LocalNetworkTable	Local network table	
		4. RelayNetworkTable	Relay network table	
		5. MemoryAliases_DM	DM area settings	
		6 MemoryAliases_CIO	CIO area settings	
		7 exit	Goes to Main Menu.	---
4. ETN SETUP	Ethernet NP settings	1. NodeID	FINS node address	/etc/FgwQnx/FgwQnxEtn.ini
		2. IpTable	FINS node–IP address table	
		3. exit	Goes to Main Menu.	---
5. CLK SETUP	Controller Link NP settings	1. NodeID	Node addresses	/etc/FgwQnx/FgwQnxClk.ini
		2. BaseAddress	Base address display	
		3. IRQ	IRQ display	
		4. SystemSw	Baud rate	
		5. exit	Goes to Main Menu.	---
6. SYSMAC SETUP	SYSMAC Board NP settings	1. NodeID	Node address	/etc/FgwQnx/ FgwQnxSysmac.ini
		2. Startmode	Startup mode	
		3. SysmacDriver SETUP	I/O port address display and mailbox interval	/etc/FgwQnx/ FgwQnxSysmacDriver.ini
		4. SysmacMapping	Event memory allocations	/etc/FgwQnx/ FgwQnxSysmacMapping.ini
		5. exit	Goes to Main Menu.	---

Main Menu	Usage	Menu item		Settings	Settings file
7. DeviceNet SETUP	DeviceNet NP settings	1. NodeID		Local MAC ID	/etc/FgwQnx/ FgwQnxDrm.ini
		2. Baudrate		Baud rate	
		3. Scanlist		Scan list	/etc/FgwQnx/scanlist.ini
		4. ScanCycleTime		Scan cycle time	/etc/FgwQnx/ FgwQnxDrm.ini
		5. StartScanMode		Startup scan mode	
		6 ComErrorStop		Remote I/O communications handling for communications errors	
		7 EventCycleTime		Event memory refresh interval	
		8 InAreaName1		Input area 1 area	
		9 InAreaOffset1		Input area 1 first word	
		10 InAreaSize1		Input area 1 size	
		11 InAreaName2		Input area 2 area	
		12 InAreaOffset2		Input area 2 first word	
		13 InAreaSize2		Input area 2 size	
		14 OutAreaName1		Output area 1 area	
		15 OutAreaOffset1		Output area 1 first word	
		16 OutAreaSize1		Output area 1 size	
		17 OutAreaName2		Output area 2 area	
		18 OutAreaOffset2		Output area 2 first word	
		19 OutAreaSize2		Output area 2 size	
		20 StatusAreaName		Area for status area	
		21 StatusAreaOffset		First word of status area	
		22 StatusAreaSize		Size of status area	
		23 exit		Goes to Main Menu.	---
8 HLK SETUP	C-series Host Link, CV-series Host Link, and CompoWay NP settings	1 Set Com1 2 Set Com2 3 Set Com3	1 NodeID	Node address	/etc/FgwQnx/FgwQnxHlk.ini
			2 ComSet	Communications parameter	
			3 TimeOut	Timeout time	
			4 RetryCnt	Number of retries	
			5 NetTblSet	Host Link address table	/etc/FgwQnx/HlkNetTbl.ini
			6 exit	Goes to previous level.	---
		4 exit		Goes to Main Menu.	---
9 RUT SETUP	Reserved for future development. Cannot be accessed.				
10 exit	Accesses Exit Menu.	1 Discard Changes & exit			
		2 Save Changes & exit			
		3 Make Temporary File & exit			
		4 MainMenu		Goes to Main Menu.	---

4-3-5 Basic Operating Procedures

This section describes the basic operating procedures used for ONC_wizard.

Menu Selections

To select an item from a menu, input the number of the item after the prompt (Number Selection) and press the Enter Key.

```
Setup Utility Ver.1.00 [MAIN MENU]
-----------------------------------------------------
 1. SYSTEM SETUP
 2. RESOURCE SETUP
 3. FinsGateway SETUP
 4. ETN SETUP
 5. CLK SETUP
 6. SYSMAC SETUP
 7. DeviceNet SETUP
 8. HLK SETUP
 9. RUT SETUP
10. exit
-----------------------------------------------------
Number Selection(1-10,n:next,p:prev,q:quit):2↵
```

Scrolling Down

If there are more than 10 items in a display, entering “n” or “next” followed by the Enter Key will display the next page of the display. These inputs are not case sensitive.

```
Setup Utility Ver.1.00 [DeviceNet SETUP MENU]
-----------------------------------------------------
 1. NodeID            63
 2. Baudrate          0
 3. scanlist
 4. ScanCycleTime     0
 5. StartScanMode     1
 6. ComErrorStop      0
 7. EventCycleTime    10
 8. InAreaName1       CIO
 9. InAreaOffset1     2000
10. InAreaSize1       64
-----------------------------------------------------
Number Selection(1-10,n:next,p:prev,q:quit):n↵
```

If “n” and the Enter Key are entered above, the following display will appear.

```
Setup Utility Ver.1.00 [DeviceNet SETUP MENU]
-----------------------------------------------------
11. InAreaName2       DM
12. InAreaOffset2     0
13. InAreaSize2       0
14. OutAreaName1      CIO
15. OutAreaOffset1    1900
16. OutAreaSize1      64
17. OutAreaName2      DM
18. OutAreaOffset2    0
19. OutAreaSize2      0
20. StatusAreaName2   CIO
-----------------------------------------------------
Number Selection(11-20,n:next,p:prev,q:quit):
```

Scrolling Up

If the second page of a display is being shown, as in the above example, entering “p” or “prev” followed by the Enter Key will display the previous page of the display. These inputs are not case sensitive.

Exiting from Setting Displays

- If ***exit*** is displayed on the menu, select it to exit from the display.
- If ***exit*** is not display, “q” or “quit” followed by the Enter Key can be entered to exist. These inputs are not case sensitive.

```
Setup Utility Ver.1.00 [StartService]
-------------------------------------------------
 1. CPU_UNIT
 2. ETN
 3. HLK0
 4. HLK1
 5.
 6.
 7.
 8.
 9.
10.
-------------------------------------------------
Number Selection(1-10,n:next,p:prev,q:quit):r
```

Input Data

1, 2, 3... 1. Select the number of the item from the menu, e.g., SubnetMask has been selected in the following display.

```
Setup Utility Ver.1.00 [SYSTEM SETUP MENU]
-------------------------------------------------
 1. HostName          onchost
 2. SubnetMask         255.255.255.0
 3. IpRoute
 4. Host File
 5. exit
-------------------------------------------------
Number Selection(1-5,n:next,p:prev,q:quit):2r
```

An entry prompt for the selected item will be displayed.

```
Setup Utility Ver.1.00 [SYSTEM SETUP MENU]
-------------------------------------------------
 1. HostName          onchost
 2. SubnetMask         255.255.255.0
 3. IpRoute
 4. Host File
 5. exit
-------------------------------------------------
SubnetMask:  <-- Entry prompt for the selected item.
```

2. Input the setting and press the Enter Key.
   - To delete the setting, press the Enter Key without entering a setting.
   - If an error is displayed, press any key and repeat the procedure from the beginning.

Manipulating Table Data

1, 2, 3... 1. Select the number of the item in the table to be entered or changed. Item 4 has been selected below.

```
Setup Utility Ver.1.00 [LocalNetworkTable]
----------------------------------------------------
 1. 1,17
 2. 2,21
 3. 3,22
 4.
 5.
 6.
 7.
 8.
 9.
10.
----------------------------------------------------
Number Selection(1-10,n:next,p:prev,q:quit):4↵
```

A prompt will appear for input of the selected item.

```
Setup Utility Ver.1.00 [LocalNetworkTable]
----------------------------------------------------
 1. 1,17
 2. 2,21
 3. 3,22
 4.
 5.
 6.
 7.
 8.
 9.
10.
----------------------------------------------------
 4: ← Input prompt for the selected item.
```

2. Input the setting and press the Enter Key
   - If an error is displayed, press any key and repeat the procedure from the beginning.
   - To delete the setting, press the Enter Key without entering a setting.
   - If there is more than one page in the table, entering “n” or “next” followed by the Enter Key to display the next page or enter “p” or “prev” followed by the Enter Key to display the previous page. These inputs are not case sensitive.

4-3-6 SYSTEM SETUP

The SYSTEM SETUP Menu is used to make the following settings for Ethernet.

Menu item	Settings	Settings file
1. HostName	Local node host	/etc/netstart
2. SubnetMask	Subnet mask	
3. IpRoute	IP router addresses	/iproute
4. Host File	Host IP addresses	/etc/hosts
5. exit	Goes to Main Menu.	---

HostName

Set the name of the host of the local node. The host name can normally be left at its default setting of *onchost*. This host name must be set as the host name under *4. Host File.*

SubnetMask

Set the subnet mask for the IP address. Set a subnet mask if required.

Syntax

Set the number of digits required by the class of the IP address.

```
xxx.xxx.xxx.xxx
Class A     255.0.0.0
Class B     255.255.0.0
Class C     255.255.255.0
```

The default mask is 255.0.0.0 (class A). If the local IP address is changed, make sure that the subnet mask is set correctly according to the IP address class.

IpRouter

Set the addresses of the IP routers.

Syntax

Set each destination network address and the address of the corresponding IP router with a space separating them.

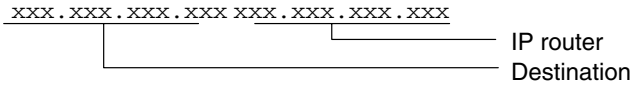

Example

```
Setup Utility Ver.1.00 [IpRoute]
-------------------------------------------------
 1. 10.0.0.0 192.168.37.1
 2. 192.168.36.0 192.168.37.1
 3.
 4.
 5.
 6.
 7.
 8.
 9.
10.
-------------------------------------------------
```

Host File

Set each host name and the corresponding IP address. The Open Network Controller does not use DNS.

Example

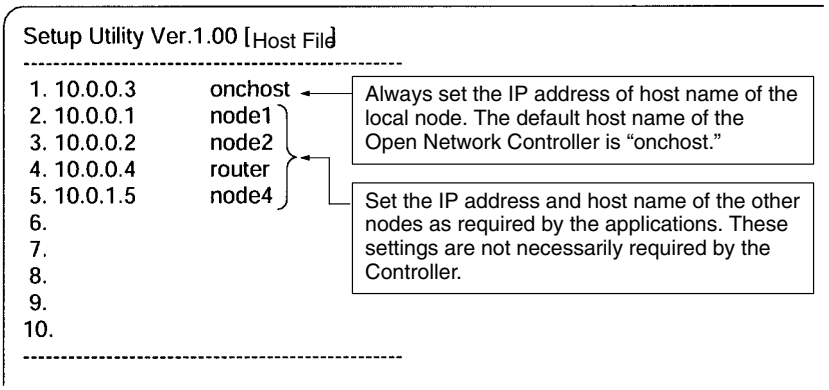

Note
1. The default IP address of the local node is 10.0.0.1.
2. Changes in settings, including changes to IP addresses, will be effected only after the Open Network Controller has been restarted (reset or power cycled).

4-3-7 RESOURCE SETUP

The RESOURCE SETUP Menu is used to allocate processes to the COM ports.

Menu item	Settings	Settings file
1. COM PROCESS COUNT	Number of COM ports	/etc/FgwQnx/FgwQnx.ini
2. COM1 PROCESS	NP allocation to COM1	
3. COM2 PROCESS	NP allocation to COM2	
4. COM3 PROCESS	NP allocation to COM3	
5. exit	Goes to Main Menu.	---

COM PROCESS COUNT This setting specifies the number of allocated COM ports and should not normally be changed. It is set to 3 by default.

COM1/2/3 PROCESS Set the NP to allocate to each COM port. The following NPs can be allocated: HLK0, HLK1, and HLK2.

4-3-8 FinsGateway SETUP

The FinsGateway SETUP Menu is used to make the following settings for FinsGateway.

Menu item	Settings	Settings file
1. StartService	Startup services	/etc/FgwQnx/FgwQnx.ini
2. UnitID	Unit addresses	
3. LocalNetworkTable	Local network table	
4. RelayNetworkTable	Relay network table	
5. MemoryAliases_DM	DM area settings	
6 MemoryAliases_CIO	CIO are settings	
7 exit	Goes to Main Menu.	---

StartService Set the NPs that are to be started. CPU_UNIT and ETN must be set. Set the other NPs according to your hardware configuration.

DRM: Built-in device network
CLK: Controller Link Board
SYSMAC0: SYSMAC Board
HLK□: C-series Host Link, CV-series Host Link, and CompoWay/F
RUT□: For future expansion.

Example

```
Setup Utility Ver.1.00 [StartService]
-----------------------------------------------------
 1. CPU_UNIT
 2. ETN
 3. HLK0
 4. HLK1
 5. CLK
 6.
 7.
 8.
 9.
10.
-----------------------------------------------------
```

UnitID

Set the unit address of each NP.

- CPU_UNIT must be set to unit address 0.
- Other NPs can be set within the following ranges.

The NP will not be started unless it is started under *1. StartService*.

ETN:	1 to 253
HLK□:	1 to 253
CLK:	16 to 31
DRM:	1 to 253
SYSMAC0:	1 to 253

LocalNetworkTable

Set the local network table. Settings are made in pairs of network numbers and unit addresses. Make one setting for each NP.

Example

```
Setup Utility Ver.1.00 [LocalNetworkTable]
-----------------------------------------------------
 1. 1,17
 2. 2,21
 3. 3,22
 4.
 5.
```

Separate each network address and its unit number with a comma.

RelayNetworkTable

Set the relay network table for FINS. Input three entries on each line in the following order, separating each with a comma: Destination network address, relay network address, relay node address.

Example

```
Setup Utility Ver.1.00 [RelayNetworkTable]
-----------------------------------------------------
 1. 5,1,4
 2.
 3.
```

This setting says to go through node 4 of network 1 to get to FINS network 5.

MemoryAliases_DM

Set the number of DM words to be used. Up to 32,767 words can be set.

Example

```
Setup Utility Ver.1.00 [EvtMem_DM SETUP MENU]
-----------------------------------------------------
 1. NumChannels      32767
 2. NumConditions    200
 3. exit
-----------------------------------------------------
```

Set up to 32,767 words.

For future expansion. Not currently used.

MemoryAliases_CIO

Set the number of CIO words to be used. Up to 8,192 words can be set.

Example

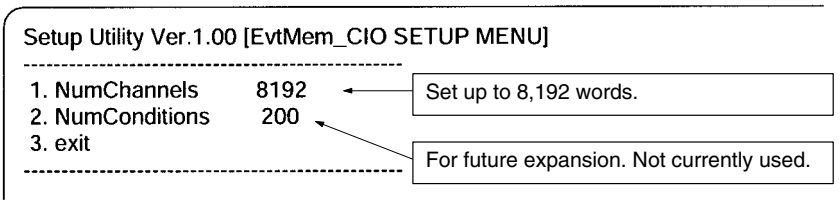

4-3-9 ETN SETUP

The ENT SETUP Menu is used to make the following settings for the Ethernet NP.

Menu item	Settings	Settings file
1. NodeID	FINS node address	/etc/FgwQnx/FgwQnxEtn.ini
2. IpTable	FINS node–IP address table	
3. exit	Goes to Main Menu.	---

NodeID

Set the FINS node address for the local node to between 1 and 253. (Node 255 cannot be used for IP broadcasting.)

IpTable

Set the IP address corresponding to the FINS node address for each node on the Ethernet network. Set one line for each node containing the node address and then the IP address separated by a comma. Up to 32 nodes can be set.

Example

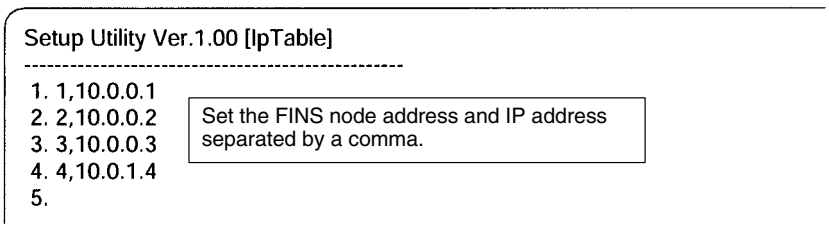

4-3-10 CLK SETUP

The CLK SETUP Menu is used to make the following settings for the Controller Link NP.

Menu item	Settings	Settings file
1. NodeID	Node addresses	/etc/FgwQnx/FgwQnxClk.ini
2. BaseAddress	Base address display	
3. IRQ	IRQ display	
4. SystemSw	Baud rate	
5. exit	Goes to Main Menu.	---

The DIP switch and jumper pin on the Controller Link Board must be set to the setting displayed for the base address and IRQ.

NodeID

Set the node address of the Controller Link Board to between 1 and 32.

BaseAddress

This item displays the base address to which the Controller Link Board must be set. Set the DIP switch on the Controller Link Board to the value displayed here (0xDA000).

IRQ

This item displays the IRQ to which the Controller Link Board must be set. Set the jumper pin on the Controller Link Board to the value displayed here (15).

SystemSw

Set the baud rate.

1: 500 Kbps
2: 1 Mbps
3: 2 Mbps

Note Set the baud rate to the same values as the other nodes (e.g., Controller Link Units) on the Controller Link network.

4-3-11 SYSMAC SETUP

The SYSMAC SETUP Menu is used to make the following settings for the SYSMAC Board NP.

Menu item	Settings	Settings file
1. NodeID	Node address	/etc/FgwQnx/ FgwQnxSysmac.ini
2. Startmode	Startup mode	
3. SysmacDriver SETUP	I/O port address display and mailbox interval	/etc/FgwQnx/ FgwQnxSysmacDriver.ini
4. SysmacMapping	Event memory allocations	/etc/FgwQnx/ FgwQnxSysmacMapping.ini
5. exit	Goes to Main Menu.	---

NodeID

Set the node address of the SYSMAC Board to between 1 and 253.

Startmode

Set the startup mode of the SYSMAC Board.

1: MONITOR, 0: Use mode set on Board

SysmacDriver SETUP

Set the execution time interval for the mailbox service. The I/O port address will also be displayed.

Example

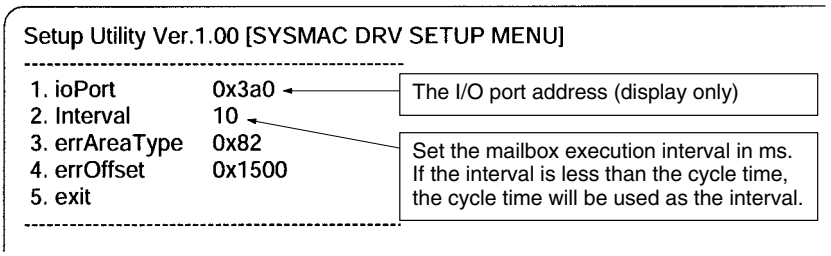

Note The DIP switch on the SYSMAC Board must be set to the setting displayed for I/O port address.

SysmacMapping

Set allocations of event memory to the SYSMAC Board. The area and first address on the Board are set along with the corresponding area and first address on the Open Network Controller. The transfer size and direction are also specified.

- Each line contains an enable setting, the Board memory area code, the first Board address, the Controller memory area code, the first Controller address, the number of words to transfer, and the direction. Each setting is separated with a comma.
- Enable setting: 0 = disable, 1 = enable
- Memory area code: 80 = CIO, 82 = DM
- Number of words: 1 to 128
- Direction setting: 0 = Board to Controller or 1 = Controller to Board)

Example

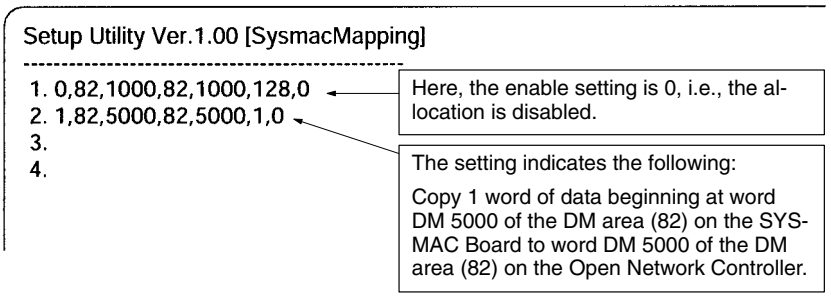

4-3-12 DeviceNet SETUP

The DeviceNet SETUP Menu is used to make the following settings for the DeviceNet NP.

Menu item	Settings	Settings file
1. NodeID	Local MAC ID	/etc/FgwQnx/ FgwQnxDrm.ini
2. Baudrate	Baud rate	
3. Scanlist	Scan list	/etc/FgwQnx/scanlist.ini
4. ScanCycleTime	Scan cycle time	/etc/FgwQnx/ FgwQnxDrm.ini
5. StartScanMode	Startup scan mode	
6 ComErrorStop	Remote I/O communications handling for communications errors	
7 EventCycleTime	Event memory refresh interval	
8 InAreaName1	Input area 1 area	
9 InAreaOffset1	Input area 1 first word	
10 InAreaSize1	Input area 1 size	
11 InAreaName2	Input area 2 area	
12 InAreaOffset2	Input area 2 first word	
13 InAreaSize2	Input area 2 size	
14 OutAreaName1	Output area 1 area	
15 OutAreaOffset1	Output area 1 first word	
16 OutAreaSize1	Output area 1 size	
17 OutAreaName2	Output area 2 area	
18 OutAreaOffset2	Output area 2 first word	
19 OutAreaSize2	Output area 2 size	
20 StatusAreaName	Area for status area	
21 StatusAreaOffset	First word of status area	
22 StatusAreaSize	Size of status area	
23 exit	Goes to Main Menu.	---

NodeID Set the MAC ID of the local node.

Baudrate Set the DeviceNet baud rate.

0: 125 kbps, 1: 250 kbps, 2: 500 kbps

Note The DeviceNet baud rate must be the same for the master and all slaves.

Scanlist Set the scan list to allocate memory to the DeviceNet slaves.

On DeviceNet, the MAC ID is the same as the FINS node address.

FINS node address 0 is for the local node and cannot be used unless FINS is not used and only event memory is being allocated.

The scan list contains the input and output areas, first words, and sizes for each MAC ID on the DeviceNet network in the format given below. Any line beginning with "#" will be ignored.

Example: 01,1,00,00,1,00,02

Enter the following settings on each line, separating each setting with a comma (do not omit any zeros except for those in I/O area numbers): MAC ID, input area number, input offset, input size, output area number, output offset, and output area size.

Item	Setting
MAC ID	Set the MAC ID of the slave between 00 and 63. The MAC ID will be used as the FINS node address.
Input area number	Set the number specified in the number specified in /etc/FgwQnx/FgwQnxDrm.ini.
Input area offset	Set the number of bytes. The start of the area will be offset by the set number of bytes from the beginning of the input position specified in /etc/FgwQnx/FgwQnxDrm.ini.
Input size	Set the number of bytes between 00 and 64.
Output area number	Set the number specified in the number specified in /etc/FgwQnx/FgwQnxDrm.ini.
Output area offset	Set the number of bytes. The start of the area will be offset by the set number of bytes from the beginning of the output position specified in /etc/FgwQnx/FgwQnxDrm.ini.
Output size	Set the number of bytes between 00 and 64.

Note When only explicit messages are going to be used, set the input and output area sizes to 0.

Example

```
Setup Utility Ver.1.00 [scanlist]
-------------------------------------------------
 1. 01,1,00,00,1,00,02
 2. 02,1,00,02,1,00,00
 3. 03,1,00,00,1,04,02
 4. 04,1,02,02,1,00,00
 5. 05,1,00,00,1,02,01
```

Refer to *4-7-6 Scan Lists* for descriptions of the meaning of the above settings.

ScanCycleTime

Set the time to scan all nodes on the DeviceNet network. If 0 is set, the cycle time will be made as short as possible. The time can be set between 1 and 500 (ms).

The actual scan cycle times can be read from the status area as follows: 5th word: Current time, 6th word: Maximum time, 7th word: Minimum time.

StartScanMode

Set the DeviceNet mode to use at startup.

0: Don't scan, 1: Scan

ComErrorStop

Set the handling of the scan when a DeviceNet communications error occurs.

0: Continue the scan for all nodes without errors.
1: Stop the scan for all nodes.
Explicit message communications will also be stopped.

EventCycleTime

Set the refresh interval for event memory data between 1 and 10,000 (ms). The refresh interval should be set to a value near the current value of the communications cycle time (see *DeviceNet Status Area* under *4-6-7 DRM_UNIT Settings).*

InAreaName1

Set the event memory area in which words are to be allocated as input area 1 (inputs from DeviceNet to the event memory). Either CIO or DM can be set.

InAreaOffset1

Set the word in the event memory area to use as the first word of input area 1.

InAreaSize1 Set the number of words to be allocated as input area 1 between 0 and 128. If 0 is set, input area 1 will not be allocated in event memory.

InAreaName2 Set the event memory area in which words are to be allocated as input area 2 (inputs from DeviceNet to the event memory). Either CIO or DM can be set.

InAreaOffset2 Set the word in the event memory area to use as the first word of input area 2.

InAreaSize2 Set the number of words to be allocated as input area 2 between 0 and 128. If 0 is set, input area 2 will not be allocated in event memory.

OutAreaName1 Set the event memory area in which words are to be allocated as output area 1 (outputs from event memory to DeviceNet). Either CIO or DM can be set.

OutAreaOffset1 Set the word in the event memory area to use as the first word of output area 1.

OutAreaSize1 Set the number of words to be allocated as output area 1 between 0 and 128. If 0 is set, output area 1 will not be allocated in event memory.

OutAreaName2 Set the event memory area in which words are to be allocated as output area 2 (outputs from event memory to DeviceNet). Either CIO or DM can be set.

OutAreaOffset2 Set the word in the event memory area to use as the first word of output area 2.

OutAreaSize2 Set the number of words to be allocated as output area 2 between 0 and 128. If 0 is set, output area 2 will not be allocated in event memory.

StatusAreaName Set the event memory area in which words are to be allocated the DeviceNet status area. Either CIO or DM can be set.

StatusAreaOffset Set the word in the event memory area to use as the first word of the DeviceNet status area.

StatusAreaSize Set 81 as the number of words to be allocated as the DeviceNet status area. This setting must always be 81 words.

4-3-13 HLK SETUP

The HLK SETUP Menu is used to set COM port communications parameter and the Host Link address table.

Menu item		Settings	Settings file
1 Set Com1 2 Set Com2 3 Set Com3	1 NodeID	Node address	/etc/FgwQnx/FgwQnxHlk.ini
	2 ComSet	Communications parameter	
	3 TimeOut	Timeout time	
	4 RetryCnt	Number of retries	
	5 NetTblSet	Host Link address table	/etc/FgwQnx/HlkNetTbl.ini
	6 exit	Goes to previous level.	---
4 exit		Goes to Main Menu.	---

Note Setting procedures are the same for all the COM ports.

NodeID Set the node address of the HLK NP between 1 and 253.

ComSet

Set the RS-232C communications parameters. Settings are given in the following example.

Example

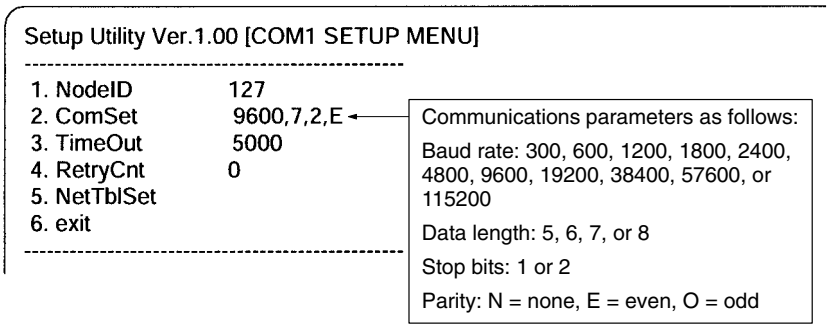

TimeOut

Set the timeout time for Host Link responses in ms.

RetryCnt

Set the number of retries.

NetTblSet

Set the unit address, protocol, and model for each Host Link node in table format. Each entry in the table consists of the following items separated by commas: FINS node address, unit number, protocol, model.

The setting ranges are as follows:

FINS node address:	1 to 253
Unit number:	0 to 255
Protocol:	SYSWAY = C-series Host Link SYSWAY-CV = CV-series Host Link Compoway/F = CompoWay/F

Example

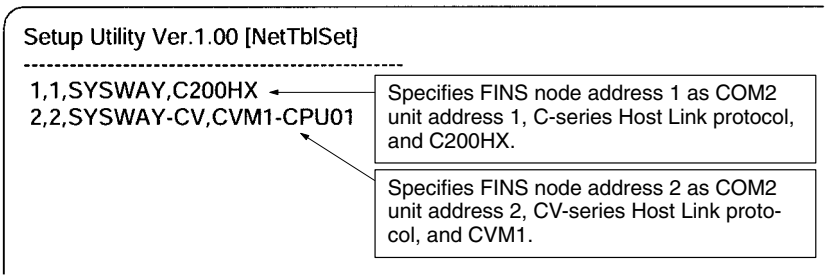

4-3-14 RUT SETUP

The RUT SETUP Menu is for future expansion and cannot be used.

4-3-15 exit

exit is used to access the following Exit Menu. Refer to *4-3-2 Starting and Exiting* for details.

Menu item
1 Discard Changes & exit
2 Save Changes & exit
3 Make Temporary File & exit
4 MainMenu

4-4 Making Settings with a vi Editor

Use the following procedure to directly edit settings files with a vi editor.

1, 2, 3...

1. Log onto the Open Network Controller.
2. Start ONC_wizard, select ***10. exit*** from the Main Menu and then select ***3. Make Temporary File & exit.*** The temporary files will be saved in /usr/tmp as *.onc.
3. Edit the temporary files using the vi editor.
4. Execute ONC_Check for the temporary files after editing them. If there are no errors in the temporary files, the original settings files will be overwritten with the contents of the temporary files. The temporary files will be deleted.

Setting Errors

The following will be performed if one or more errors is discovered when checking settings.

- The errors will be recorded in a SetupErr.txt file in /usr/tmp.
- The temporary files containing the errors will be saved (i.e., not deleted).

Use the contents of SetupErr.txt to correct the settings.

Warning Messages

The following type of messages will be displayed on-screen and recorded in the error file when errors are discovered for ONC_wizard and ONC_check errors.

```
FgwQnx.ini.onc
  Warning Not Setting!    [RouteTable] RelayNetworks
FgwQnxSysmacMapping.ini.onc
  Warning Not Setting!    [sysmacDrv0]
scanlist.ini.onc
  Warning Not Setting!    []
HlkNetTbl.ini.onc
  Warning Not Setting!    [HLK2]
```

The above messages indicate that required settings are missing. These settings are not set to default values and must be set by the user. If the settings are not required for your application, the above warnings can be ignored.

4-5 Transferring Settings Files with FTP

Use the following procedure to edit settings files with a standard text editor on a computer.

1, 2, 3...

1. Log onto the Open Network Controller.
2. Start ONC_wizard, select ***10. exit*** from the Main Menu and then select ***3. Make Temporary File & exit.*** The temporary files will be saved in /usr/tmp as *.onc.
3. Transfer the temporary files from the Open Network Controller to the computer using FTP in ASCII mode.
4. Edit the temporary files using a standard text editor on the computer.
5. Transfer the temporary files from the computer to the Open Network Controller using FTP.
6. Execute ONC_Check for the temporary files after editing them. If there are no errors in the temporary files, the original settings files will be overwritten with the contents of the temporary files. The temporary files will be deleted.

Setting Errors

The following will be performed if one or more errors is discovered when checking settings.

- The errors will be recorded in a SetupErr.txt file in /usr/tmp.

• The temporary files containing the errors will be saved (i.e., not deleted).

Use the contents of SetupErr.txt to correct the settings.

Warning Messages

The following type of messages will be displayed on-screen and recorded in the error file when errors are discovered for ONC_wizard and ONC_check settings.

```
FgwQnx.ini.onc
  Warning Not Setting!    [RouteTable] RelayNetworks
FgwQnxSysmacMapping.ini.onc
  Warning Not Setting!    [sysmacDrv0]
scanlist.ini.onc
  Warning Not Setting!    []
HlkNetTbl.ini.onc
  Warning Not Setting!    [HLK2]
```

The above messages indicate that required settings are missing. These settings are not set to default values and must be set by the user. If the settings are not required for your application, the above warnings can be ignored.

4-6 Setting File Descriptions

This section describes the settings files that contain the environment settings for the Open Network Controller. The contents shown for the files in this sections are the default contents.

4-6-1 Setting Files

The setting files are listed in the following table. The default settings of the files and items in the files that can be changed are explained next.

File name	Contents
/etc/hosts	Host IP addresses
/etc/netstart	Host name
	Subnet mask
/iproute	IP router
/etc/FgwQnx/FgwQnx.ini	Startup services
	Local and relay network tables
/etc/FgwQnx/FgwQnxEtn.ini	ETN_UNIT (Ethernet NP)
/etc/FgwQnx/FgwQnxDrm.ini	DRM_UNIT (DeviceNet NP)
/etc/FgwQnx/scanlist.ini	DeviceNet scan list
/etc/FgwQnx/FgwQnxClk.ini	CLK_UNIT (Controller Link NP)
/etc/FgwQnx/FgwQnxHlk.ini	HLK_UNIT (C-series Host Link, CV-series Host Link, and CompoWay/F NP)
/etc/FgwQnx/HlkNetTbl.ini	Host Link address tables (C-series Host Link, CV-series Host Link, and CompoWay/F NP)
/etc/FgwQnx/FgwQnxSysmac.ini	SYSMAC_UNIT (SYSMAC Board connection NP)
/etc/FgwQnx/FgwQnxSysmacDriver.ini	SYSMAC_UNIT driver
/etc/FgwQnx/FgwQnxSysmacMapping.ini	SYSMAC memory allocations in event memory

4-6-2 Host IP Addresses

/etc/hosts contains a table of IP addresses and host names.

Note The Open Network Controller does not use DNS.

```
# Host Database
# This file should contain the addresses and aliases
# for local hosts that share this file.
# It is used only for "ifconfig" and other operations
# before the nameserver is started.
#
#
127.1  localhost localhost.my.domain
#
# Imaginary network.
10.0.0.1 onchost
10.0.0.2 oncclient
```

Always set the IP address of host name of the local node. The default host name of the Open Network Controller is “onchost”.

Set the IP address and host name of the other nodes as required by the applications. These settings are not necessarily required by the Controller.

4-6-3 Host Name and Subnet Mask

/etc/netstart contains the host name of the Open Network Controller and the subnet mask. Change the subnet mask in this file when required.

The IP address of the local node will be the IP address set for the host name in /etc/hosts.

```
#if you need SUBNETMASK add
#-subnetmask XXX.XXX.XXX.XXX
#in front of "up"
#[Example]
#/usr/ucb/ifconfig en1 onchost netmask 255.255.0.0 up
#export SOCK=$NODE
ONCHOST=onchost
ONCMASK=255.0.0.0
/bin/slay -f Socklet;
/usr/ucb/Socklet  $ONCHOST &
/usr/ucb/ifconfig en1 $ONCHOST netmask $ONCMASK up
/usr/ucb/ifconfig lo0 localhost up
/usr/bin/syslogd
/usr/ucb/inetd
/usr/ucb/routed
/iproute
```

Set the host name.

Set the subnet mask according to the class of the IP address of the Open Network Controller.

4-6-4 IP Router

/iproute contains IP router addresses corresponding to the final network addresses. No settings are required unless IP routing is being used.

```
;ip route value setting.
;[format]
;/usr/ucb/route add NetworkAddress RouterAddress
;[Example]
;/usr/ucb/route add 10.0.0.0 10.0.0.3
;/usr/ucb/route add 192.168.36.0 10.0.0.3
```

This line specifies that the IP router for network address 191.168.36 is 10.0.0.3.

The semicolon must be removed from the beginning of the line for the setting to be effective.

4-6-5 Startup Services and Network Settings

/etc/FgwQnx/FgwQnx.ini contains the FinsGateway QNX settings, including the startup services and the local/relay network tables (unit addresses and networks). The sizes of the DM and CIO areas are also set.

```
;=======================================================
; (c) Copyright OMRON Corporation 1999
;    All Rights Reserved
;=======================================================
; FgwQnx.ini - ini file for FinsGatewayQNX
;
[FgwLibMgr]
Qnx_pFlagMask=

;-------------------------------------------------------
; SERVICES under SCM
;-------------------------------------------------------
;OtherServices= DRM,SYSMAC0,CLK,HLK2,RUT0,RUT1,Hsv0,Hsv1
[Services]
Services=CPU_UNIT, ETN, HLK0 ,HLK1

;-------------------------------------------------------
; TICKSIZE FOR TIMER
;-------------------------------------------------------
[TickSize]
TickSize=500

;-------------------------------------------------------
; PRIORITY & SCHEDULE
; Schedule = FIFO|RoundRobin|OTHER
;-------------------------------------------------------
[Priority]
FgwLibMgr=23
CPU_UNIT=23
ETN=23
SysmacCpu=23
SysmacMbx=23
SysmacCyc=23
Clk=23
Clkdrv=23
DRM=23
HLK0=23
HLK1=23
HLK2=23
RUT0=23
RUT1=23
Hsv0=23
Hsv1=23
Sch=23
Mua=23

[Schedule]
FgwLibMgr=OTHER
CPU_UNIT=OTHER
ETN=OTHER
Clk=OTHER
Clkdrv=RoundRobin
SysmacCpu=OTHER
SysmacMbx=RoundRobin
SysmacCyc=RoundRobin
DRM=OTHER
```

Set the services to be started.

CPU_UNIT and ETN must always be set.

Set the others according to your hardware configuration.

DRM:	Built-in device network
CLK:	Controller Link Board
SYSMAC0:	SYSMAC Board
HLK□:	C-series Host Link, CV-series Host Link, and CompoWay/F
RUT□:	For future expansion.

```
HLK0=OTHER
HLK1=OTHER
HLK2=OTHER
RUT0=OTHER
RUT1=OTHER
Hsv0=OTHER
Hsv1=OTHER
Sch=OTHER
Mua=OTHER

;-----------------------------------------------------------
; FINS UNITID
;-----------------------------------------------------------
[UnitID]
CPU_UNIT=0
ETN=17
CLK=18
SYSMAC0=19
DRM=20
HLK0=21
HLK1=22
HLK2=23
RUT0=21
RUT1=22
RUT2=23
Hsv0=24
Hsv1=25

[RouteTable]
;LocalNetworks=(Network#,Unit#)
;RelayNetworks=(DestinationNetwork#,RelayNetwork#,RelayNode#)
LocalNetworks=(1,17)(2,21)(3,22)

RelayNetworks=

[COM]
COMs=3
COM1=HLK0
#COM1=RUT0
COM2=HLK1
#COM2=RUT1
COM3=HLK2

[COM1]
Device=/dev/ser1
IRQ=4
[COM2]
Device=/dev/ser2
IRQ=3
[COM3]
Device=/dev/ser3
IRQ=5
```

Set the unit address of each service.

CPU_UNIT must be set to unit address 0. Other services can be set within the following ranges.

ETN:	1 to 253
HLK□:	1 to 253
CLK:	16 to 31
DRM:	1 to 253
SYSMAC0:	1 to 253

The service will not be started unless it is set as as startup service.

Set the FINS network routing tables. These tables will be downloaded to the Controller Link Board at startup.

Set the local network table. Set the network address and unit address (“Unit ID”) for each NP being used.

Set the relay network table for the FINS network.

Set three items on each line in the following order, separating each with a comma: Final network address, relay network address, relay node address.

For example, (5,1,4) says to go through node 4 of network 1 to get to FINS network 5.

Set the NP to allocate to each COM port.

The default settings are shown at the left. The following NPs can be allocated: HLK0, HLK1, and HLK2.

To allocate nothing to a port, delete the text after the equals sign.

```
;-----------------------------------------------------
; CPU_UNIT
;-----------------------------------------------------
[CPU_UNIT]
ImagePath=/usr/FgwQnx/bin/CPU_UNIT
TerminateType=Signal
TerminateData=2
StartType=auto
Qnx_PflagMask=
HardwareType=ITNC-EIS01/EIX01
HardwareVersion=V1.03
;.....
; MEMORY ALIASES
;.....
MemoryAliases=DM,CIO
DM=02
CIO=00

;-----------------------------------------------------
; EventMemory
;-----------------------------------------------------
;.....
; DM
;.....
[EmMemory_DM]
NumChannels=32767
NumConditions=200
AccessMethod=EmMemory
NeedMapMemory=TRUE
IsVolatile=FALSE
;.....
; CIO
;.....
[EmMemory_CIO]
NumChannels=8192
NumConditions=200
AccessMethod=EmMemory
NeedMapMemory=TRUE
IsVolatile=FALSE

;-----------------------------------------------------
; ETN
;-----------------------------------------------------
[ETN]
ImagePath=/usr/FgwQnx/bin/etn
TerminateType=Signal
TerminateData=2
StartType=auto
SubProfile=/etc/FgwQnx/FgwQnxEtn.ini

;-----------------------------------------------------
; Clk
;-----------------------------------------------------
[CLK]
ImagePath=/usr/FgwQnx/bin/clk
TerminateType=Signal
TerminateData=2
StartType=auto
SubProfile=/etc/FgwQnx/FgwQnxClk.ini

;-----------------------------------------------------
; Sysmac unit Card no is 0.
;-----------------------------------------------------
[SYSMAC0]
ImagePath=/usr/FgwQnx/bin/sysmacCpu
TerminateType= Signal
TerminateData= 2
StartType= auto
CommandLine= sysmacCpu -n 0
SubProfile=/etc/FgwQnx/FgwQnxSysmac.ini
```

Set the number of words to allocate to the DM area. Up to 32,767 words can be allocated.

Set the number of words to allocate to the CIO area. Up to 8,192 words can be allocated.

```
;-----------------------------------------------------
; DRM
;-----------------------------------------------------
[DRM]
ImagePath=/usr/FgwQnx/bin/drm
TerminateType=Signal
TerminateData=2
StartType=auto
SubProfile=/etc/FgwQnx/FgwQnxDrm.ini

;-----------------------------------------------------
; HLK
;-----------------------------------------------------
[HLK0]
ImagePath=/usr/FgwQnx/bin/hlk
TerminateType=Signal
TerminateData=2
StartType=auto
CommandLine= hlk -n 0
SubProfile=/etc/FgwQnx/FgwQnxHlk.ini
[HLK1]
ImagePath=/usr/FgwQnx/bin/hlk
TerminateType=Signal
TerminateData=2
StartType=auto
CommandLine= hlk -n 1
SubProfile=/etc/FgwQnx/FgwQnxHlk.ini
[HLK2]
ImagePath=/usr/FgwQnx/bin/hlk
TerminateType=Signal
TerminateData=2
StartType=auto
CommandLine= hlk -n 2
SubProfile=/etc/FgwQnx/FgwQnxHlk.ini

;-----------------------------------------------------
; RUT
;-----------------------------------------------------
[RUT0]
ImagePath=/usr/FgwQnx/bin/RemoteUart
TerminateType=Signal
TerminateData=2
StartType=auto
CommandLine= RemoteUart -n 0
SubProfile=/etc/FgwQnx/FgwQnxRut.ini
[RUT1]
ImagePath=/usr/FgwQnx/bin/RemoteUart
TerminateType=Signal
TerminateData=2
StartType=auto
CommandLine= RemoteUart -n 1
SubProfile=/etc/FgwQnx/FgwQnxRut.ini
[RUT2]
ImagePath=/usr/FgwQnx/bin/RemoteUart
TerminateType=Signal
TerminateData=2
StartType=auto
CommandLine= RemoteUart -n 2
SubProfile=/etc/FgwQnx/FgwQnxRut.ini
```

```
;-----------------------------------------------------
; HSV
;-----------------------------------------------------
[Hsv0]
ImagePath=/usr/FgwQnx/bin/hsv
TerminateType=Signal
TerminateData=2
StartType=auto
CommandLine=hsvUnit -n 0
SubProfile=/etc/FgwQnx/FgwQnxHsv.ini
Hsv0Unit=Hsv0/Hsv0Unit
[Hsv1]
ImagePath=/usr/FgwQnx/bin/hsv
TerminateType=Signal
TerminateData=2
StartType=auto
CommandLine=hsvUnit -n 1
SubProfile=/etc/FgwQnx/FgwQnxHsv.ini
Hsv1Unit=Hsv1/Hsv1Unit

;-----------------------------------------------------
; IpLibMgr
;-----------------------------------------------------
[IpLibMgr]
ImagePath=/usr/FgwQnx/bin/ipLibMgr
TerminateType=Signal
TerminateData=2
StartType=auto
SubProfile=/etc/FgwQnx/FgwQnxIpLibMgr.ini

;-----------------------------------------------------
; SCH
;-----------------------------------------------------
[Sch]
ImagePath=/usr/FgwQnx/bin/schIp
TerminateType=Signal
TerminateData=2
StartType=auto
SubProfile=/etc/FgwQnx/FgwQnxSch.ini

;-----------------------------------------------------
; MUA
;-----------------------------------------------------
[Mua]
ImagePath=/hd/usr/mail/bin/muaIp
TerminateType=Signal
TerminateData=2
StartType=auto
SubProfile=/hd/usr/mail/etc/FgwQnxMua.ini
```

4-6-6 ETN_UNIT Settings

/etc/FgwQnx/FgwQnxEtn.ini contains settings for the Ethernet NP.

```
;==================================================
; (c) Copyright OMRON Corporation 1999
;    All Rights Reserved
;==================================================
; FgwQnxEtn.ini - ini file for ETN
;
[FINS]
NodeID=1
UdpPortNumber=

[IpTable]
IpTable=(2,10.0.0.2)

IpTableProxy=
```

Set the FINS node address for the local node on the Ethernet network to between 1 and 253.

Set the UDP port number to use for Ethernet as a decimal value. UDP port number 9600 will be used if the setting is omitted. Normally, 9600 should be used.

Set the IP address corresponding to the FINS node address for each node on the Ethernet network. Set one line for each node containing the node address and then the IP address separated by a comma. Up to 32 nodes can be set.

Settings can be made using host names set in /etc/hosts, e.g., (2,oncclient).

Set the IP address to send FINS data to for any destination for which the IP address is not known. This setting is not required.

4-6-7 DRM_UNIT Settings

/etc/FgwQnx/FgwQnxDrm.ini contains settings for the DeviceNet NP.

```
;==================================================
; (c) Copyright OMRON Corporation 1999
;    All Rights Reserved
;==================================================
; FgwQnxDrm.ini - ini file for DRM
;
[DRM]
#ImagePath Driver's Path
ImagePath=/usr/FgwQnx/bin/drmdrv
#ScanListPath ScanList's Path
ScanListPath=/etc/FgwQnx/scanlist.ini

#NodeID(1-63)
NodeID=63
#IRQ(12,15)
IrqNo=12
#MemAddress(0xC8000,0xCC000,
#   0xD0000,0xD4000,0xD8000,0xDC000,
#   0xE0000,0xE4000,0xE8000,0xEC000,
#   0xF0000,0xF4000,0xF8000,0xFC000)
MemAddress=0xCC000
#PortAddress(0x378,0x388,0x398,0x3A8)
PortAddress=0x398
#Baudrate(0:125kbps,1:250kbps,2:500kbps)
Baudrate=0
#ScanCycleTime(0:fastest,1-500<ms>)
ScanCycleTime=0

#StartScanMode(0:not scan,1:scanning)
```

Set the MAC ID of the local node.

Set the DeviceNet baud rate.
0: 125 kbps, 1: 250 kbps, 2: 500 kbps

Set the time to scan all nodes on the DeviceNet network. If 0 is set, the cycle time will be made as short as possible. The time can be set between 1 and 500 (ms).

The actual scan cycle times can be read from the status area as follows: 5th word: Current time, 6th word: Maximum time, 7th word: Minimum time.

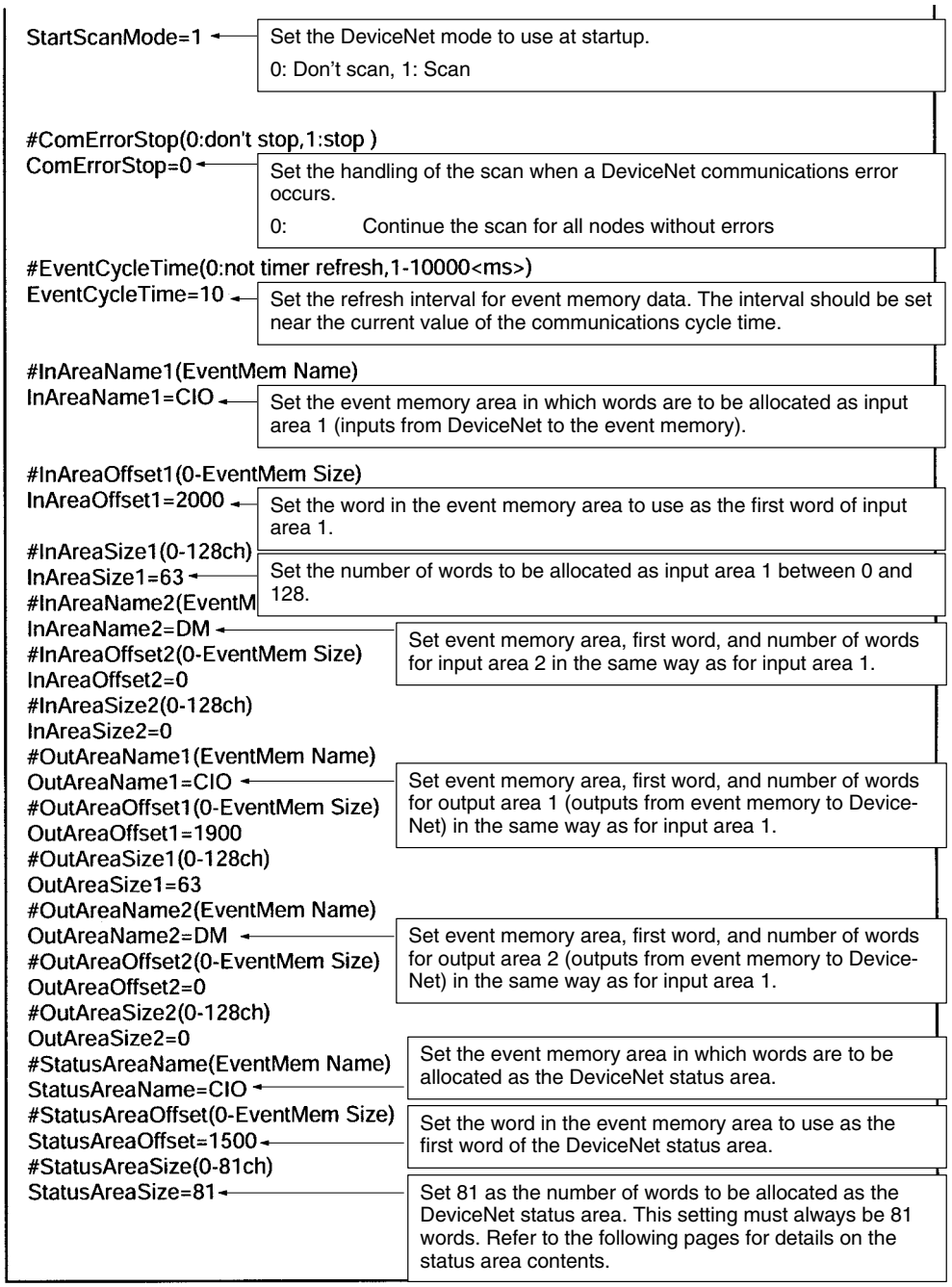
StartScanMode=1
Set the DeviceNet mode to use at startup.
0: Don't scan, 1: Scan
#ComErrorStop(0:don't stop,1:stop)
ComErrorStop=0
Set the handling of the scan when a DeviceNet communications error occurs.
0: Continue the scan for all nodes without errors
#EventCycleTime(0:not timer refresh,1-10000<ms>)
EventCycleTime=10
Set the refresh interval for event memory data. The interval should be set near the current value of the communications cycle time.
#InAreaName1(EventMem Name)
InAreaName1=CIO
Set the event memory area in which words are to be allocated as input area 1 (inputs from DeviceNet to the event memory).
#InAreaOffset1(0-EventMem Size)
InAreaOffset1=2000
Set the word in the event memory area to use as the first word of input area 1.
#InAreaSize1(0-128ch)
InAreaSize1=63
Set the number of words to be allocated as input area 1 between 0 and 128.
#InAreaName2(EventM
InAreaName2=DM
#InAreaOffset2(0-EventMem Size)
InAreaOffset2=0
#InAreaSize2(0-128ch)
InAreaSize2=0
Set event memory area, first word, and number of words for input area 2 in the same way as for input area 1.
#OutAreaName1(EventMem Name)
OutAreaName1=CIO
#OutAreaOffset1(0-EventMem Size)
OutAreaOffset1=1900
#OutAreaSize1(0-128ch)
OutAreaSize1=63
Set event memory area, first word, and number of words for output area 1 (outputs from event memory to DeviceNet) in the same way as for input area 1.
#OutAreaName2(EventMem Name)
OutAreaName2=DM
#OutAreaOffset2(0-EventMem Size)
OutAreaOffset2=0
#OutAreaSize2(0-128ch)
OutAreaSize2=0
Set event memory area, first word, and number of words for output area 2 (outputs from event memory to DeviceNet) in the same way as for input area 1.
#StatusAreaName(EventMem Name)
StatusAreaName=CIO
Set the event memory area in which words are to be allocated as the DeviceNet status area.
#StatusAreaOffset(0-EventMem Size)
StatusAreaOffset=1500
Set the word in the event memory area to use as the first word of the DeviceNet status area.
#StatusAreaSize(0-81ch)
StatusAreaSize=81
Set 81 as the number of words to be allocated as the DeviceNet status area. This setting must always be 81 words. Refer to the following pages for details on the status area contents.

DeviceNet Status Area Contents

The contents of the DeviceNet status area are shown below. The status area consists of the following 81 words. Details are provided in the following tables.

Word offset	Size	Contents
0	1 word	Scan status
1	2 words	Scan and network communications status
3	1 word	Reserved
4	1 word	Present communications cycle time
5	1 word	Maximum communications cycle time
6	1 word	Minimum communications cycle time
7	1 word	Reserved
8 to 11	4 words	Flags showing devices registered in scan list
12 to 15	---	Reserved
16	1 word	Remote device status for MAC ID = 0
17 to 78	1 word each	Remote device status for MAC ID = 1 to 62
79	1 word	Remote device status for MAC ID = 63
80	1 word	Reserved

Scan Status (Offset: 0)

The DeviceNet operating status is given as follows:

Bits	Flag name	Meaning
0	ON_LINE	ON when DeviceNet is online. OFF when it is offline.
1	SCANNING	ON when the scan is being performed. OFF when the scan is stopped.
2 to 15	Reserved	

Scan and Network Communications Status (Offsets: 1 and 2)

The DeviceNet communications status is given as shown in the following table. All flags except the TRANSMISSION_ERROR flag will be OFF when offline, i.e., only the TRANSMISSION_ERROR flag is valid offline. All flags are valid when online even when the scan is being performed.

Bits	Flag name	Meaning
0 to 15	Reserved	
16	MEMORY_ERROR	ON when an error has been detected in reading or writing the EEPROM.
17	DUP_MAC_ERROR /BUS_OFF_ERROR	ON when a duplicate MAC ID has been detected when executing the ON_LINE command or ON when the bus is OFF.
18 to 20	Reserved	
21	TRANSMISSION_ ERROR	ON when a transmission error has been discovered, including the following errors. There is no network power supply. There are no devices on the network other than the Open Network Controller. Transmission was not possible because there was too much traffic on the network. There is a CAN controller error.
22	COMMUNICATIONS _ERROR	ON when an I/O connection that has been opened on the network times out. This flag is an OR of the COMMUNICATIONS_ ERROR Flags in the Device status.
23	VERIFICATION_ ERROR	ON when a verifications error has been discovered, including the following errors. A device that does not exist on the network is registered in the scan list. A device that is not supported is registered in the scan list (e.g., a COS-only slave). The data size of a device on the network differs from the data size registered in the scan list. This flag is an OR of the DEVICE_DOES_NOT_ EXIST and the IO_DATA_SIZE_MISMATCH flags in the Device status.
24 to 29	Reserved	
30	ERROR/ COMMUNICATIONS _STOPPAGE	ON when one or more of the following errors has been discovered. One or more of the flags in bits 16 to 23 of the scan status is ON. Scanning has been stopped because the TRANSMISSION_ERROR (bit 21) or COMMUNICATIONS_ERROR (bit 22) flag turned ON and scanning was set to be stopped for communications errors. This flag will be turned OFF if a scan stopped for a communications error is restarted using a FINS command.
31	IO_DATA_ COMMUNICATIONS	ON when remote I/O communications are being performed. This flag will be ON when I/O data is being exchanged with one or more devices registered in the scan list. Message communications will not affect this flag. This flag will be turned OFF when a transmission error (i.e., timeout or no network power) occurs.

Present Communications Cycle Time (Offset: 4)

This word contains the present value of the communications cycle time in ms. This information is valid only when the scan is being performed.

Max. Communications Cycle Time (Offset: 5)

This word contains the maximum value of the communications cycle time in ms. This information is valid only when the scan is being performed.

Min. Communications Cycle Time (Offset: 6)

This word contains the minimum value of the communications cycle time in ms. This information is valid only when the scan is being performed.

Registered Device Information (Offsets: 8 to 11)

This word contains a bit map that shows the devices that are registered in the scan list. The relationship of the flags in the bit map and the MAC IDs of the devices is shown in the following table. The body of the table shows the MAC IDs.

Offset	Bit 15	Bit 14	Bit 13	Bit 12	Bit 11	Bit 10	Bit 9	Bit 8	Bit 7	Bit 6	Bit 5	Bit 4	Bit 3	Bit 2	Bit 1	Bit 0
8	15	14	13	12	11	10	9	8	7	6	5	4	3	2	1	0
9	31	30	29	28	27	26	25	24	23	22	21	20	19	18	17	16
10	47	46	45	44	43	42	41	40	39	38	37	36	35	34	34	32
11	63	62	61	60	59	58	57	56	55	54	53	52	51	50	49	48

The status of the flags in the above bit map have the following meaning.

Flag	Meaning
ON	The device is not registered in the scan list.
OFF	The device is registered in the scan list.

Device Status (Offsets: 16 to 79)

One word is used to give the status of each device with MAD IDs of 0 to 63. All flags will be OFF when offline. All flags are valid when online even when the scan is being performed.

Bits	Flag name	Meaning
0 to 2	Reserved.	
3	DEVICE_DOES_ NOT_EXIST	ON when the device does not exist, including the following errors. The device does not exist on the network but is registered in the scan list. The device is not supported even though it is registered in the scan list (e.g., a COS-only slave).
4	IO_DATA_SIZE_ MISMATCH	ON when the data size of the device on the network differs from the data size registered in the scan list.
5	COMMUNICATIONS _ERROR	ON when an I/O connection that has been opened for the device times out.
6	Reserved.	
7	IO_DATA_ COMMUNICATIONS	ON when remote I/O communications are being performed. This flag will be ON when I/O data is being exchanged with the device. For devices that are using only explicit client messages, this flag will be ON when messages can be used. This flag will be turned OFF when a transmission error (i.e., timeout or no network power) occurs.
8 to 15	Reserved.	

4-6-8 DeviceNet Scan List

/etc/FgwQnx/scanlist.ini contains the scan list settings for allocations to DeviceNet slaves. On the DeviceNet network, the MAC ID is used as the FINS node address in the Open Network Controller. FINS node address 0 is for the local node and cannot be used unless FINS is not used and only event memory is being allocated.

The scan list contains the input and output areas, first words, and sizes for each MAC ID on the DeviceNet network in the format given below. Any line beginning with "#" will be ignored.

Example: 01,1,00,00,1,00,02
Enter the following settings on each line, separating each setting with a comma (do not omit any zeros except for those in I/O area numbers): MAC ID, input area number, input offset, input size, output area number, output offset, and output area size.

Item	Setting
MAC ID	Set the MAC ID of the slave between 00 and 63. The MAC ID will be used as the FINS node address.
Input area number	Set the number specified in the number specified in /etc/FgwQnx/FgwQnxDrm.ini.
Input area offset	Set the number of bytes. The start of the area will be offset by the set number of bytes from the beginning of the input position specified in /etc/FgwQnx/FgwQnxDrm.ini.
Input size	Set the number of bytes between 00 and 64.
Output area number	Set the number specified in the number specified in /etc/FgwQnx/FgwQnxDrm.ini.
Output area offset	Set the number of bytes. The start of the area will be offset by the set number of bytes from the beginning of the output position specified in /etc/FgwQnx/FgwQnxDrm.ini.
Output size	Set the number of bytes between 00 and 64.

Note
1. The input and output area offsets must be even numbers except for 8-bit slaves.
2. When using A MULTIPLE I/O TERMINAL, two words are used by the Communications Unit to input the I/O Unit interface status to the master. Set the scan list accordingly.
3. When only explicit messages are going to be used, set the input and output area sizes to 0.

```
;=====================================================
; (c) Copyright OMRON Corporation 1999
;    All Rights Reserved
;=====================================================
; scanlist.ini - ini file for DRM-SCANLIST
;
; MacID,InAreaNo,InOffset,InSize,OutAreaNo,OutOffset,OutSize
; ex) FgwQnxDrm.ini is default settting
; 10,01,20,02,01,00,00 means "DRT1-ID16(MacID=10) -> CIO2010"
; 11,01,00,00,01,10,02 means "DRT1-OD16(MacID=11) <- CIO1905"
; 12,01,00,00,01,00,00 means "Explicit message only(MacID=12)"
;
```

Refer to *4-7-6 Scan Lists* for descriptions of the meaning of the settings.

4-6-9 Controller Link Settings

/etc/FgwQnx/FgwQnxClk.ini contains setting for the Controller Link NP. Only the node address and baud rate are set in this file.

The Controller Link Board must be set to agree with the settings in this file.

```
;=====================================================
; (c) Copyright OMRON Corporation 1999
;    All Rights Reserved
;=====================================================
; FgwQnxClk.ini - ini file for CLK
[OTHER_PROCESS]
DriverImagePath=/usr/FgwQnx/bin/clkdrv

[MAPPING_PROFILE]
MappingProfile=/etc/FgwQnx/FgwQnxClkMapping.ini

[CLK_UNIT]
Name=FGW-CLK0
BaseAddr=0xDA000
BoardName=3G8F5-CLK01
SystemSw=3

MaxLink=32000
NodeID=30
IRQ=15
Mode=Auto
```

Set the base address on the Controller Link Board's DIP switch to this address.

Set the baud rate: 1: 500 Kbps, 2: 1 Mbps, 3: 2 Mbps

Set the node address between 1 and 32.

Set the jumper pin on the Controller Link Board to the value displayed here (15).

Note Set the baud rate to the same values as the other nodes (e.g., Controller Link Units) on the Controller Link network.

4-6-10 HLK_UNIT Settings

/etc/FgwQnx/FgwQnxHlk.ini contains the settings for the Host Link NP.

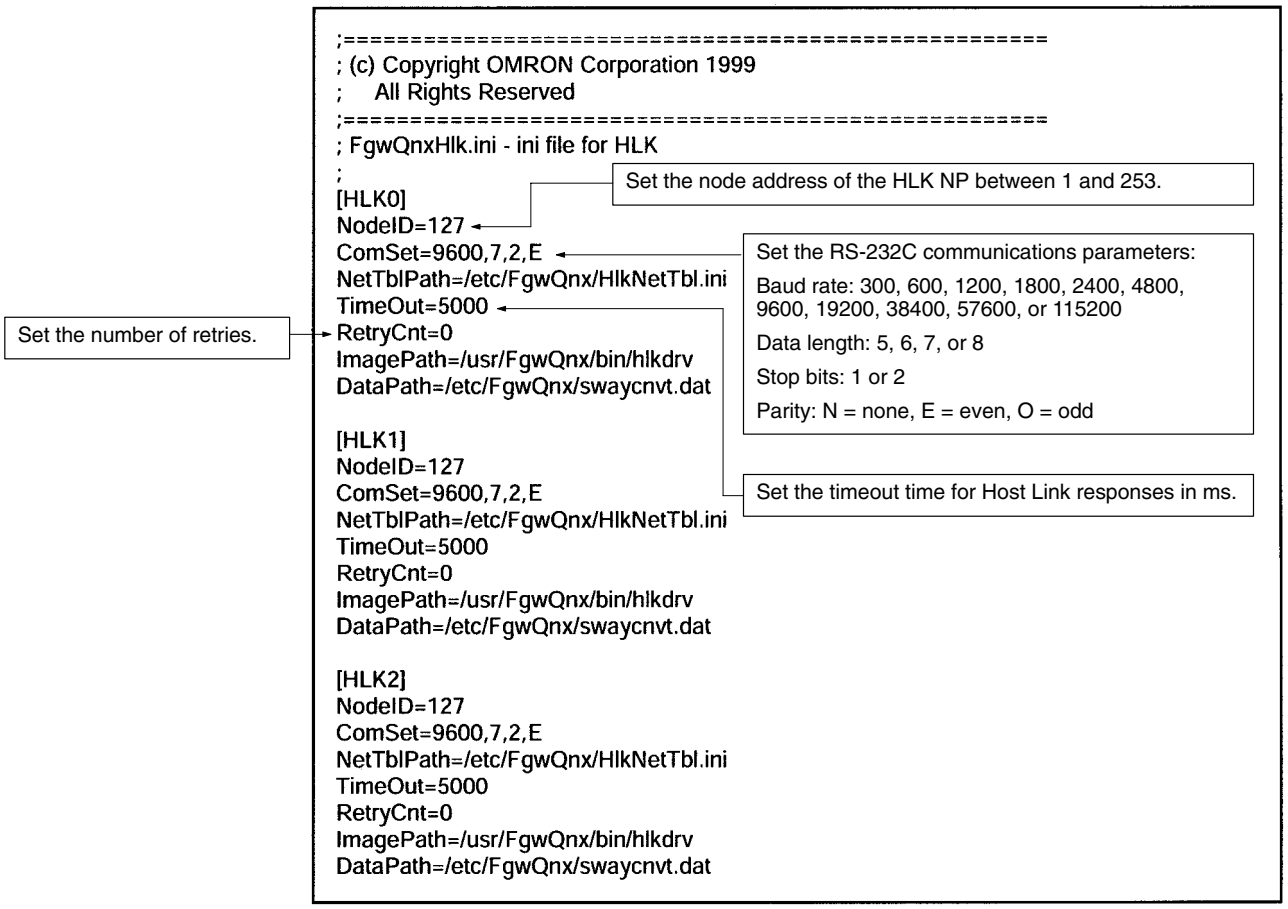

4-6-11 Host Link Address Tables

/etc/FgwQnx/HlkNetTbl.ini contains the setting file for C-series Host Link (SYSMAC WAY), CV-series Host Link (SYSMAC WAY-CV), and CompoWay/F nodes. Set the unit address, protocol, and model name.

You can not mix CompoWay/F with either C-series or CV-series Host Link nodes under the same HLK. You can mix C-series and CV-series Host Link nodes under the same HLK.

```
;=====================================================
;(c) Copyright OMRON Corporation 1999
;   All Rights Reserved
;=====================================================
;HlkNetTbl.ini-ini file for HLK-NET_TABLE
;
[HLK0]
1,0,SYSWAY,C200H
2,0,SYSWAY,C200HS
3,0,SYSWAY,C200HG
4,0,SYSWAY,C200HX
5,0,SYSWAY,C200HX-CPU65-Z
6,0,SYSWAY,C200HX-CPU85-Z
7,0,SYSWAY,200HE
8,0,SYSWAY,CQM1
9,0,SYSWAY,CPM1/CPM1A
10,0,SYSWAY,SRM1
11,0,SYSWAY,CV500
12,0,SYSWAY,CVM1-CPU01
13,0,SYSWAY,CVM1-CPU11
14,0,SYSWAY,CVM1-CPU21
15,0,SYSWAY,CV1000/CV2000
16,0,SYSWAY,C20
17,0,SYSWAY,C20H/C28H/C40H/C60H
18,0,SYSWAY,C20/28/40/60P
19,0,SYSWAY,C20/28/40/60PF
20,0,SYSWAY,C50
21,0,SYSWAY,C120/C120F
22,0,SYSWAY,C500
23,0,SYSWAY,C500F
24,0,SYSWAY,C1000H
25,0,SYSWAY,C1000HF
26,0,SYSWAY,C2000H
27,0,SYSWAY,CS1-CPU67
28,0,SYSWAY,CS1-CPU66
29,0,SYSWAY,CS1-CPU65/45
30,0,SYSWAY,CS1-CPU64/44
31,0,SYSWAY,CS1-CPU63/43/42

[HLK1]
1,1,Compoway,Other
2,2,Compoway,Other
3,3,Compoway,Other

[HLK2]
```

Set the FINS node address, unit address, protocol, and model in order, separating each with a comma.

The setting ranges are as follows:

FINS node address:	1 to 253
Unit address:	0 to 255 (depends on the PLC)
Protocol:	SYSWAY = C-series Host Link SYSWAY-CV = CV-series Host Link Compoway/F = CompoWay/F

4-6-12 SYSMAC_UNIT Settings

/etc/FgwQnx/FgwQnxSysmac.ini contains settings for the SYSMAC Board NP. Set the node address and startup mode.

```
;=====================================================
; (c) Copyright OMRON Corporation 1999
;    All Rights Reserved
;=====================================================
; FgwQnxSysmac.ini - ini file for SYSMAC
;
[OTHER_PROCESS]
MailboxImagePath = /usr/FgwQnx/bin/sysmacMbx
CyclicImagePath = /usr/FgwQnx/bin/sysmacCyc

[DRIVER_PROFILE]
SubProfile              = /etc/FgwQnx/FgwQnxSysmacDriver.ini

[REQUEST_PROFILE]
SubProfile              = /etc/FgwQnx/FgwQnxSysmacRequest.ini

[MAPPING_PROFILE]
SubProfile              = /etc/FgwQnx/FgwQnxSysmacMapping.ini

[SYSMAC_UNIT]
Name                    = Sysmac

[SYSMAC_DRV0]
NodeID                  =4   <- Set the node address of the SYSMAC Board to between 1 and 253.
Startmode               =0   <- Set the startup mode of the SYSMAC Board.
                                1: MONITOR, 0: Use mode set on Board
```

4-6-13 SYSMAC_UNIT Driver Settings

/etc/FgwQnx/FgwQnxSysmacDriver.ini contains the I/O address setting and teh service execution interval for the SYSMAC Board. Do not change the I/O port setting in this file. The I/O port setting must be made directly on the SYSMAC Board.

```
;=====================================================
; (c) Copyright OMRON Corporation 1999
;    All Rights Reserved
;=====================================================
; FgwQnxSysmacDriver.ini - ini file for Sysmac-Drvier
;
;
; Common parameter for SysmacBorad.
;
[SYSMAC_COMMON]
attachNameDrv           = sysmacMbx
attachNameCpu           = sysmacCpu
attachNameCyc           = sysmacCyc

;
;
; Parameter for SysmacBorad Number0.
;
[SYSMAC_INFO0]
baseAddr                = 0xd8000
ioPort                  = 0x3a0

[CYCLIC_SERVICE0]
iomBank0                = 0x0d90
iomBank1                = 0x0cc8
memBank0                = 0
memBank1                = 128
cycleMode               = 1
CalcRate                = 8
MinDecTime              = 1.0
MinCycleTime            = 10

[MAILBOX_SERVICE0]
Interval                = 10

[SYSTEM_ERR0]
errAreaType             = 0x82
errOffset               = 0x1500

[HNAD_SHAKE0]
typeCodeCIO             = 0x80
typeCodeDM              = 0x82
typeCodeTC_S            = 0x01
typeCodeTC_V            = 0x81

[SIMPLE_HAND_SHAKE0]
timeout                 = 0x00
sendRetry               = 3
```

The I/O port address (display only)

Set the mailbox execution interval in ms. If the interval is less than the cycle time, the cycle time will be used as the interval.

4-6-14 SYSMAC Board Allocations in Event Memory

/etc/FgwQnx/FgwQnxSysmacMapping.ini contains settings to allocate event memory to the SYSMAC Board.

The area and first address on the Board are set along with the corresponding area and first address on the Open Network Controller. The transfer size and direction are also specified.

Each line requires the longer of the following times to process: The ladder program scan time on the SYSMAC Board or the mailbox service interval.

```
;=====================================================
; (c) Copyright OMRON Corporation 1999
;    All Rights Reserved
;=====================================================
; FgwQnxSysmacMapping.ini - ini file for Sysmac-Mapping
; enable/disable,board mem type,offset,My mem type,offset,size,direction
; direction (0) from board to me, (1) from me to board
;0,80,500,80,500,128,1 means "not available"
;1,82,5000,82,5000,1,0 means "DM5000 on board copy to my DM5000"
[sysmacDrv0]
0,82,1000,82,1000,128,0
```

Here, the first bit (enable setting) is 0, i.e., the allocation is disabled.

Up to 32 lines can be set.

- Each line contains an enable setting, the Board memory area code, the first Board address, the Controller memory area code, the first Controller address, the number of words to transfer, and the direction. Each setting is separated with a comma. Up to 32 lines can be set.

  Enable setting: 0 = disable, 1 = enable
- Memory area code: 80 = CIO, 82 = DM
- Number of words: 1 to 128
- Direction setting: 0 = Board to Controller or 1 = Controller to Board)

Example

```
1,82,5000,82,5000,1,0
```

The setting indicates the following:

Copy 1 word of data beginning at word DM 5000 of the DM area (82) on the SYSMAC Board to word DM 5000 of the DM area (82) on the Open Network Controller.

4-7 Setting Examples

The following network configuration will be used as an example to describe the settings in the environment settings files of the Open Network Controller.

4-7-1 Configurations

Network Configuration

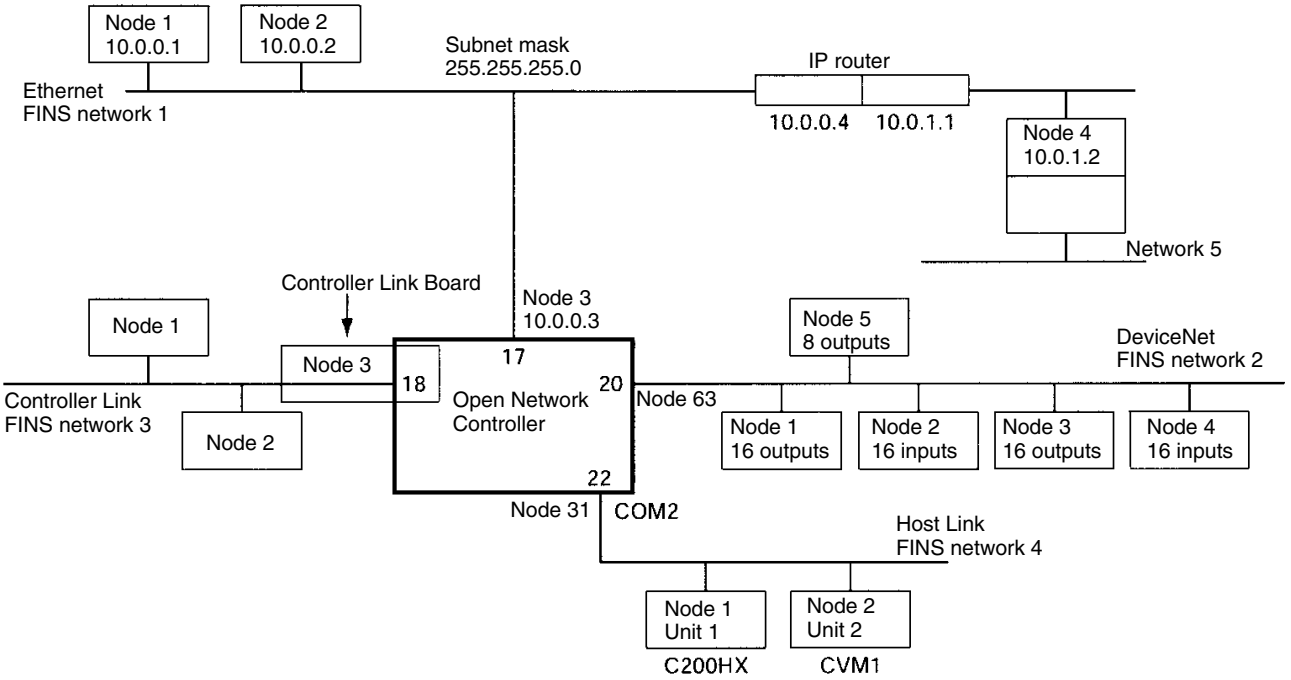

Event Memory Configuration

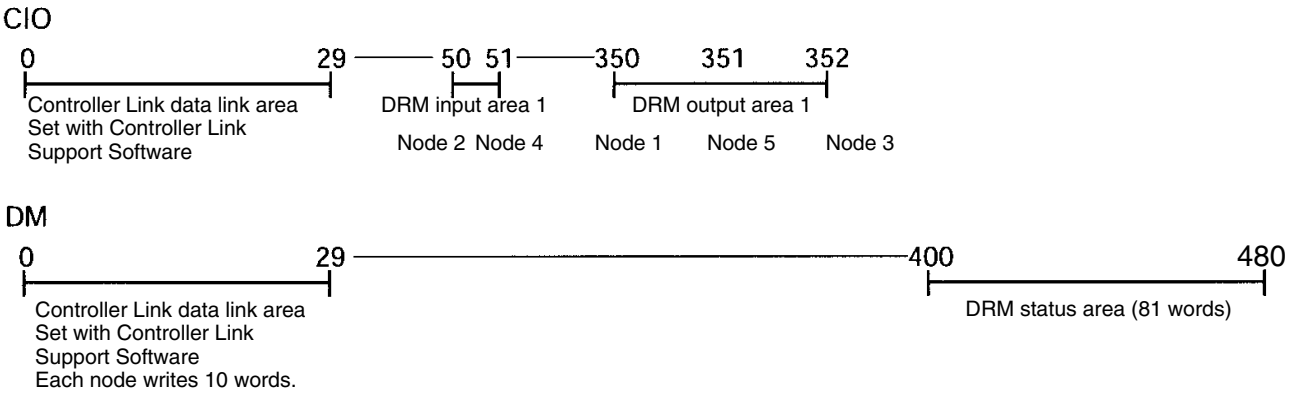

Settings Files

Settings are required in the following files for the above configurations.

Settings	Files
Ethernet	/etc/hosts, /etc/netstart, /iproute
Starting FINS services	/etc/FgwQnx/FgwQnx.ini
Ethernet NP	/etc/FgwQnx/FgwQnxEtn.ini
DeviceNet NP	/etc/FgwQnx/FgwQnxDrm.ini, /etc/FgwQnx/scanlist.ini
Controller Link NP	/etc/FgwQnx/FgwQnxClk.ini
Host Link NP	/etc/FgwQnx/FgwQnxHlk.ini, /etc/FgwQnx/HlkNetTbl.ini

Setting methods are described in the following sections.

4-7-2 Ethernet Settings

The IP addresses, host names, subnet mask, and IP router settings must be made in /etc/hosts, /etc/netstart, and /iproute.

IP Addresses and Host Names

/etc/hosts contains a table of IP addresses and host names.

Note The Open Network Controller does not use DNS.

```
# Host Database
# This file should contain the addresses and aliases
# for local hosts that share this file.
# It is used only for "ifconfig" and other operations
# before the nameserver is started.
#
#
127.1          localhost localhost.my.domain
#
# Imaginary network.
10.0.0.3       onchost
10.0.0.1       node1
10.0.0.2       node2
10.0.0.4       router
10.0.1.2       node4
```

Set the IP address of host name of the local node. The default host name of the Open Network Controller is “onchost”.

Set the IP address and host name of the other nodes as required by the applications. These settings are not necessarily required by the Controller.

Subnet Mask

etc/netstart contains the host name of the Open Network Controller and the subnet mask. Change the subnet mask in this file when required.

```
#if you need SUBNETMASK add
#-subnetmask XXX.XXX.XXX.XXX
#in front of "up"
#[Example]
#/usr/ucb/ifconfig en1 onchost netmask 255.255.0.0 up
#export SOCK=$NODE
ONCHOST=onchost
ONCMASK=255.255.255.0
/bin/slay -f Socklet;
/usr/ucb/Socklet   $ONCHOST &
/usr/ucb/ifconfig en1 $ONCHOST netmask $ONCMASK up
/usr/ucb/ifconfig lo0 localhost up
/usr/bin/syslogd
/usr/ucb/inetd
/usr/ucb/routed
/iproute
```

Set the host name.

Set the subnet mask.

I/O Router Settings

/iproute contains IP router addresses corresponding to the final network addresses. No settings are required unless IP routing is being used.

```
/usr/ucb/route add 10.0.1.0 10.0.0.4
```

This line specifies that the IP router for network address 10.0.1 is 10.0.0.4.

4-7-3 Startup Services

/etc/FgwQnx/FgwQnx.ini contains the FinsGateway QNX settings, including the startup services and the local/relay network tables (unit addresses and networks). The sizes of the DM and CIO areas are also set.

```
;=========================================================
; (c) Copyright OMRON Corporation 1999
;    All Rights Reserved
;=========================================================
; FgwQnx.ini - ini file for FinsGatewayQNX
;
[FgwLibMgr]
Qnx_pFlagMask=

;---------------------------------------------------------
; SERVICES under SCM
;---------------------------------------------------------
;OtherServices= DRM, SYSMAC0, CLK , HLK2, RUT0 ,RUT1,Hsv0,Hsv1
[Services]
Services=CPU_UNIT, ETN, HLK1, CLK, DRM

;---------------------------------------------------------
; TICKSIZE FOR TIMER
;---------------------------------------------------------
[TickSize]
TickSize=500

;---------------------------------------------------------
; PRIORITY & SCHEDULE
; Schedule = FIFO|RoundRobin|OTHER
;---------------------------------------------------------
[Priority]
FgwLibMgr=23
CPU_UNIT=23
ETN=23
SysmacCpu=23
SysmacMbx=23
SysmacCyc=23
Clk=23
Clkdrv=23
DRM=23
HLK0=23
HLK1=23
HLK2=23
RUT0=23
RUT1=23
Hsv0=23
Hsv1=23
Sch=23
Mua=23

[Schedule]
FgwLibMgr=OTHER
CPU_UNIT=OTHER
ETN=OTHER
Clk=OTHER
Clkdrv=RoundRobin
SysmacCpu=OTHER
SysmacMbx=RoundRobin
SysmacCyc=RoundRobin
DRM=OTHER
HLK0=OTHER
HLK1=OTHER
HLK2=OTHER
RUT0=OTHER
RUT1=OTHER
Hsv0=OTHER
Hsv1=OTHER
Sch=OTHER
Mua=OTHER
```

Set the services to be started.

CPU_UNIT and ENT must always be set.

Set the others according to your hardware configuration.

DRM:	Built-in device network
CLK:	Controller Link Board
SYSMAC0:	SYSMAC Board
HLK□:	C-series Host Link, CV-series Host Link, and CompoWay/F
RUT□:	For future expansion.

```
;-----------------------------------------------------
; FINS UNITID
;-----------------------------------------------------
[UnitID]
CPU_UNIT=0
ETN=17
CLK=18
SYSMAC0=19
DRM=20
HLK0=21
HLK1=22
HLK2=23
RUT0=21
RUT1=22
RUT2=23
Hsv0=24
Hsv1=25

[RouteTable]
LocalNetworks=(1,17)(2,20)(3,18)(4,22)

RelayNetworks=(5,1,4)

[COM]
COMs=3
COM1=
#COM1=RUT0
COM2=HLK1
#COM2=RUT1
COM3=

[COM1]
Device=/dev/ser1
IRQ=4
[COM2]
Device=/dev/ser2
IRQ=3
[COM3]
Device=/dev/ser3
IRQ=5

;-----------------------------------------------------
; CPU_UNIT
;-----------------------------------------------------
[CPU_UNIT]
ImagePath=/usr/FgwQnx/bin/CPU_UNIT
TerminateType=Signal
TerminateData=2
StartType=auto
Qnx_PflagMask=
HardwareType=ITNC-EIS01/EIX01
HardwareVersion= V1.03
;.....................
; MEMORY ALIASES
;.....................
MemoryAliases=DM,CIO
DM=02
CIO=00
```

Set the unit address of each service.

CPU_UNIT must be set to unit address 0. Other services can be set within the following ranges.

ETN:	1 to 253
HLK□:	1 to 253
CLK:	16 to 31
DRM:	1 to 253
SYSMAC0:	1 to 253

The service will not be started unless it is set as as startup service.

Set the FINS network routing tables. These tables will be downloaded to the Controller Link Board at startup.

Set the local network table. Set the network address and unit address ("Unit ID") for each NP being used.

Here, Ethernet is network 1, DeviceNet is network 2, Controller Link is network 3, and Host Link is network 4.

Set the relay network table for the FINS network.

Set three items on each line in the following order, separating each with a comma: Final network address, relay network address, relay node address.

Here, (5,1,4) says to go through node 4 of FINS network 1 to get to FINS network 5.

Allocates the COM2 port to HLK1.

```
;-----------------------------------------------------
; EventMemory
;-----------------------------------------------------
;.....................
; DM
;.....................
[EmMemory_DM]
NumChannels=32767
NumConditions=200
AccessMethod=EmMemory
NeedMapMemory=TRUE
IsVolatile=FALSE

;.....................
; CIO
;.....................
[EmMemory_CIO]
NumChannels=8192
NumConditions=200
AccessMethod=EmMemory
NeedMapMemory=TRUE
IsVolatile=FALSE

;-----------------------------------------------------
; ETN
;-----------------------------------------------------
[ETN]
ImagePath=/usr/FgwQnx/bin/etn
TerminateType=Signal
TerminateData=2
StartType=auto
SubProfile=/etc/FgwQnx/FgwQnxEtn.ini

;-----------------------------------------------------
; Clk
;-----------------------------------------------------
[CLK]
ImagePath=/usr/FgwQnx/bin/clk
TerminateType=Signal
TerminateData=2
StartType=auto
SubProfile=/etc/FgwQnx/FgwQnxClk.ini

;-----------------------------------------------------
; Sysmac unit Card no is 0.
;-----------------------------------------------------
[SYSMAC0]
ImagePath=/usr/FgwQnx/bin/sysmacCpu
TerminateType= Signal
TerminateData= 2
StartType= auto
CommandLine= sysmacCpu -n 0
SubProfile=/etc/FgwQnx/FgwQnxSysmac.ini

;-----------------------------------------------------
; DRM
;-----------------------------------------------------
[DRM]
ImagePath=/usr/FgwQnx/bin/drm
TerminateType=Signal
TerminateData=2
StartType=auto
SubProfile=/etc/FgwQnx/FgwQnxDrm.ini
```

Set the number of words to allocate to the DM area. Up to 32,767 words can be allocated.

Set the number of words to allocate to the CIO area. Up to 8,192 words can be allocated.

```
;-----------------------------------------------------
; HLK
;-----------------------------------------------------
[HLK0]
ImagePath=/usr/FgwQnx/bin/hlk
TerminateType=Signal
TerminateData=2
StartType=auto
CommandLine= hlk -n 0
SubProfile=/etc/FgwQnx/FgwQnxHlk.ini
[HLK1]
ImagePath=/usr/FgwQnx/bin/hlk
TerminateType=Signal
TerminateData=2
StartType=auto
CommandLine= hlk -n 1
SubProfile=/etc/FgwQnx/FgwQnxHlk.ini
[HLK2]
ImagePath=/usr/FgwQnx/bin/hlk
TerminateType=Signal
TerminateData=2
StartType=auto
CommandLine= hlk -n 2
SubProfile=/etc/FgwQnx/FgwQnxHlk.ini

;-----------------------------------------------------
; RUT
;-----------------------------------------------------
[RUT0]
ImagePath=/usr/FgwQnx/bin/RemoteUart
TerminateType=Signal
TerminateData=2
StartType=auto
CommandLine= RemoteUart -n 0
SubProfile=/etc/FgwQnx/FgwQnxRut.ini
[RUT1]
ImagePath=/usr/FgwQnx/bin/RemoteUart
TerminateType=Signal
TerminateData=2
StartType=auto
CommandLine= RemoteUart -n 1
SubProfile=/etc/FgwQnx/FgwQnxRut.ini
[RUT2]
ImagePath=/usr/FgwQnx/bin/RemoteUart
TerminateType=Signal
TerminateData=2
StartType=auto
CommandLine= RemoteUart -n 2
SubProfile=/etc/FgwQnx/FgwQnxRut.ini

;-----------------------------------------------------
; HSV
;-----------------------------------------------------
[Hsv0]
ImagePath=/usr/FgwQnx/bin/hsv
TerminateType=Signal
TerminateData=2
StartType=auto
CommandLine=hsvUnit -n 0
SubProfile=/etc/FgwQnx/FgwQnxHsv.ini
Hsv0Unit=Hsv0/Hsv0Unit
[Hsv1]
ImagePath=/usr/FgwQnx/bin/hsv
TerminateType=Signal
TerminateData=2
StartType=auto
CommandLine=hsvUnit -n 1
SubProfile=/etc/FgwQnx/FgwQnxHsv.ini
Hsv1Unit=Hsv1/Hsv1Unit
```

```
;-------------------------------------------------------
; IpLibMgr
;-------------------------------------------------------
[IpLibMgr]
ImagePath=/usr/FgwQnx/bin/ipLibMgr
TerminateType=Signal
TerminateData=2
StartType=auto
SubProfile=/etc/FgwQnx/FgwQnxIpLibMgr.ini

;-------------------------------------------------------
; SCH
;-------------------------------------------------------
[Sch]
ImagePath=/usr/FgwQnx/bin/schIp
TerminateType=Signal
TerminateData=2
StartType=auto
SubProfile=/etc/FgwQnx/FgwQnxSch.ini

;-------------------------------------------------------
; MUA
;-------------------------------------------------------
[Mua]
ImagePath=/hd/usr/mail/bin/muaIp
TerminateType=Signal
TerminateData=2
StartType=auto
SubProfile=/hd/usr/mail/etc/FgwQnxMua.ini
```

4-7-4 Ethernet NP Settings

/etc/FgwQnx/FgwQnxEtn.ini contains settings for the Ethernet NP.

```
;=======================================================
; (c) Copyright OMRON Corporation 1999
;    All Rights Reserved
;=======================================================
; FgwQnxEtn.ini - ini file for ETN
;
[FINS]
NodeID=3
UdpPortNumber=

[IpTable]
IpTable=(1,10.0.0.1)(2,10.0.0.2) (4,10.0.1.2)

IpTableProxy=
```

Set the FINS node address for the local node.

Set the UDP port number to use for Ethernet as a decimal value. UDP port number 9600 will be used if the setting is omitted.

Set the IP address corresponding to the FINS node address for each node on the Ethernet network.

Set the IP address to send FINS data to for any destination for which the IP address is not known. This setting is not required.

4-7-5 DeviceNet NP Settings

/etc/FgwQnx/FgwQnxDrm.ini contains settings for the DeviceNet NP.

```
;=====================================================
; (c) Copyright OMRON Corporation 1999
;    All Rights Reserved
;=====================================================
; FgwQnxDrm.ini - ini file for DRM
;
[DRM]
#ImagePath Driver's Path
ImagePath=/usr/FgwQnx/bin/drmdrv
#ScanListPath ScanList's Path
ScanListPath=/etc/FgwQnx/scanlist.ini

#NodeID(1-63)
NodeID=63
#IRQ(12,15)
IrqNo=12
#MemAddress(0xC8000,0xCC000,
#                          0xD0000,0xD4000,0xD8000,0xDC000,
#                          0xE0000,0xE4000,0xE8000,0xEC000,
#                          0xF0000,0xF4000,0xF8000,0xFC000)
MemAddress=0xCC000
#PortAddress(0x378,0x388,0x398,0x3A8)
PortAddress=0x398
#Buadrate(0:125kbps,1:250kbps,2:500kbps)
Baudrate=0
```

Set the MAC ID of the local node.

Set the DeviceNet baud rate.
0: 125 kbps, 1: 250 kbps, 2: 500 kbps

Note The DeviceNet baud rate must be the same for the master and all slaves.

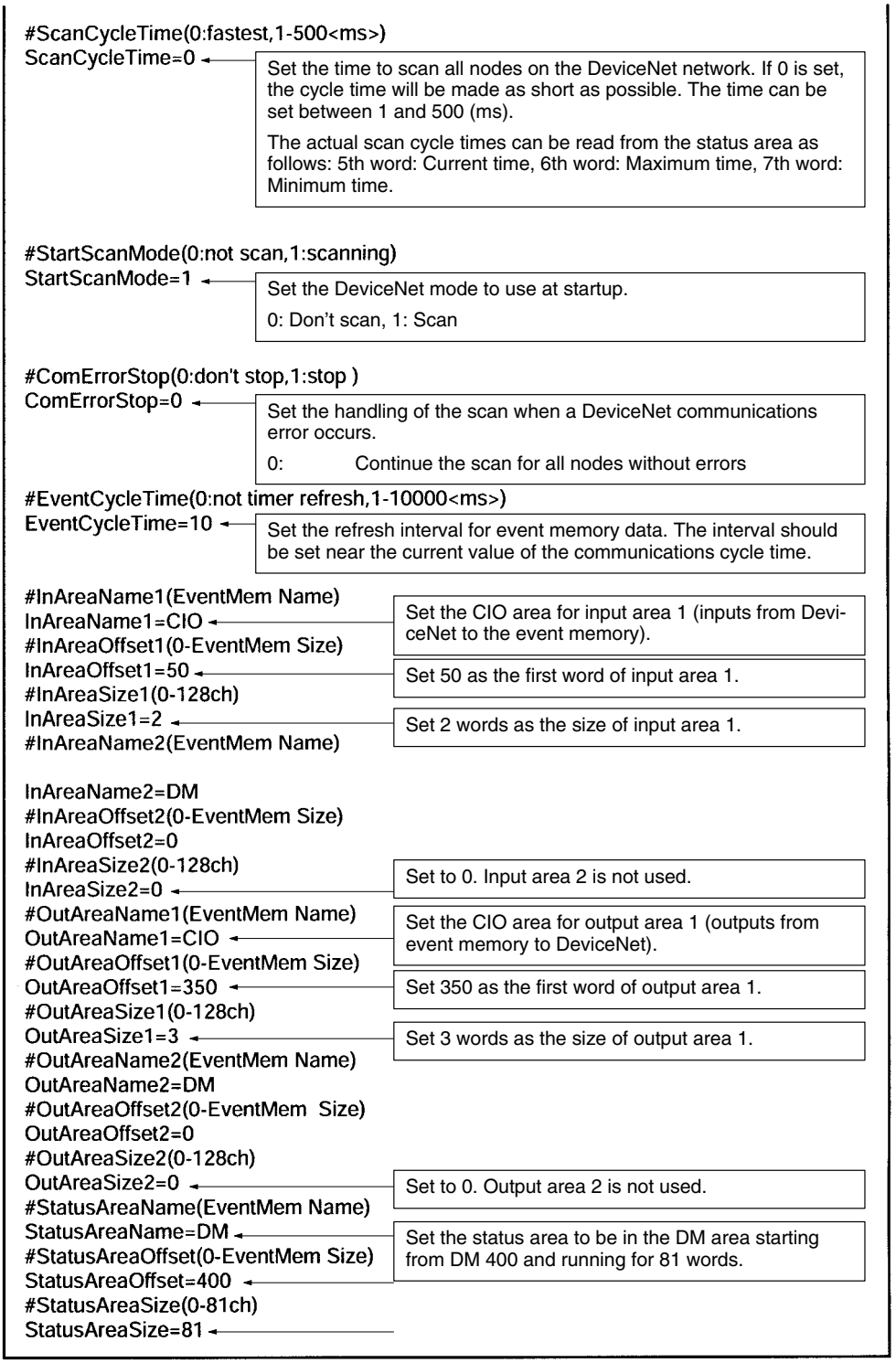

4-7-6 Scan List

/etc/FgwQnx/scanlist.ini contains the scan list settings for allocations to DeviceNet slaves. On the DeviceNet network, the MAC ID is used as the FINS node address. FINS node address 0 is for the local node and cannot be used unless FINS is not used and only event memory is being allocated.

The input area, first input word, input size, output area, first output word, and output size must be set for each DeviceNet MAC ID.

The scan list contains the input and output areas, first words, and sizes for each MAC ID on the DeviceNet network in the format given below. Any line beginning with "#" will be ignored.

Example: 01,1,00,00,1,00,02

Enter the following settings on each line, separating each setting with a comma (do not omit zeros except for in I/O area numbers): MAC ID, input area number, input offset, input size, output area number, output offset, and output area size.

Item	Setting
MAC ID	Set the MAC ID of the slave between 00 and 63. The MAC ID will be used as the FINS node address.
Input area number	Set the number specified in the number specified in /etc/FgwQnx/FgwQnxDrm.ini.
Input area offset	Set the number of bytes. The start of the area will be offset by the set number of bytes from the beginning of the input position specified in /etc/FgwQnx/FgwQnxDrm.ini.
Input size	Set the number of bytes between 00 and 64.
Output area number	Set the number specified in the number specified in /etc/FgwQnx/FgwQnxDrm.ini.
Output area offset	Set the number of bytes. The start of the area will be offset by the set number of bytes from the beginning of the output position specified in /etc/FgwQnx/FgwQnxDrm.ini.
Output size	Set the number of bytes between 00 and 64.

Note When only explicit messages are used, set the input and output area sizes to 0.

```
;=====================================================
; (c) Copyright OMRON Corporation 1999
;    All Rights Reserved
;=====================================================
; scanlist.ini - ini file for DRM-SCANLIST
;
; MacID,InAreaNo,InOffset,InSize,OutAreaNo,OutOffset,OutSize
; ex) FgwQnxDrm.ini is default settting
; 10,01,20,02,01,00,00 means "DRT1-ID16(MacID=10) -> CIO2010"
; 11,01,00,00,01,10,02 means "DRT1-OD16(MacID=11) <- CIO1905"
; 12,01,00,00,01,00,00 means "Explicit message only(MacID=12)"
;


01,1,00,00,1,00,02
02,1,00,02,1,00,00
03,1,00,00,1,04,02
04,1,02,02,1,00,00
05,1,00,00,1,02,01
```

← Refer to the following table for the meaning of these entries.

01, 1, 00, 00, 1, 00, 02	Node 1 is allocated 2 bytes beginning with the 1st byte (offset 00) in output area 1 (which starts at CIO 350), i.e., it is allocated CIO 350.
02, 1, 00, 02, 1, 00, 00	Node 2 is allocated 2 bytes beginning with the 1st byte (offset 00) in input area 1 (which starts at CIO 50), i.e., it is allocated CIO 50.
03, 1, 00, 00, 1, 04, 02	Node 3 is allocated 2 bytes beginning with the 5th byte (offset 04) in output area 1 (which starts at CIO 350), i.e., it is allocated CIO 352.
04, 1, 02, 02, 1, 00, 00	Node 4 is allocated 2 bytes beginning with the 3rd byte (offset 02) in input area 1 (which starts at CIO 50), i.e., it is allocated CIO 51.
05, 1, 00, 00, 1, 02, 01	Node 5 is allocated 1 byte beginning with the 3rd byte (offset 02) in output area 1 (which starts at CIO 350), i.e., it is allocated the rightmost byte of CIO 351. If the offset is even, the rightmost byte will be allocated; if the offset is odd, the leftmost byte will be allocated. The rightmost byte of CIO 351 would be allocated for "05, 1, 00, 00, 1, 03, 01".

Note Two bytes equal one word.

4-7-7 Controller Link NP Settings

/etc/FgwQnx/FgwQncClk.ini contains settings for the Controller Link NP. Only the node address and baud rate are set in this file.

The Controller Link Board must be set to agree with the settings in this file.

```
;=====================================================
; (c) Copyright OMRON Corporation 1999
;    All Rights Reserved
;=====================================================
; FgwQnxClk.ini - ini file for CLK
[OTHER_PROCESS]
DriverImagePath=/usr/FgwQnx/bin/clkdrv

[MAPPING_PROFILE]
MappingProfile=/etc/FgwQnx/FgwQnxClkMapping.ini

[CLK_UNIT]
Name=FGW-CLK0
BaseAddr=0xDA000
BoardName=3G8F5-CLK01
SystemSw=3

MaxLink=32000
NodeID=30
IRQ=15
Mode=Auto
```

Set the base address on the Controller Link Board's DIP switch to this address.

Set the baud rate: 1: 500 Kbps, 2: 1 Mbps, 3: 2 Mbps

Set the node address between 1 and 32.

Set the jumper pin on the Controller Link Board to the value displayed here (15).

Note Set the baud rate to the same values as the other nodes (e.g., Controller Link Units) on the Controller Link network.

4-7-8 HLK_UNIT Settings

/etc/FgwQnx/FgwQnxHlk.ini contains the settings for the Host Link NP. Here, set the node address.

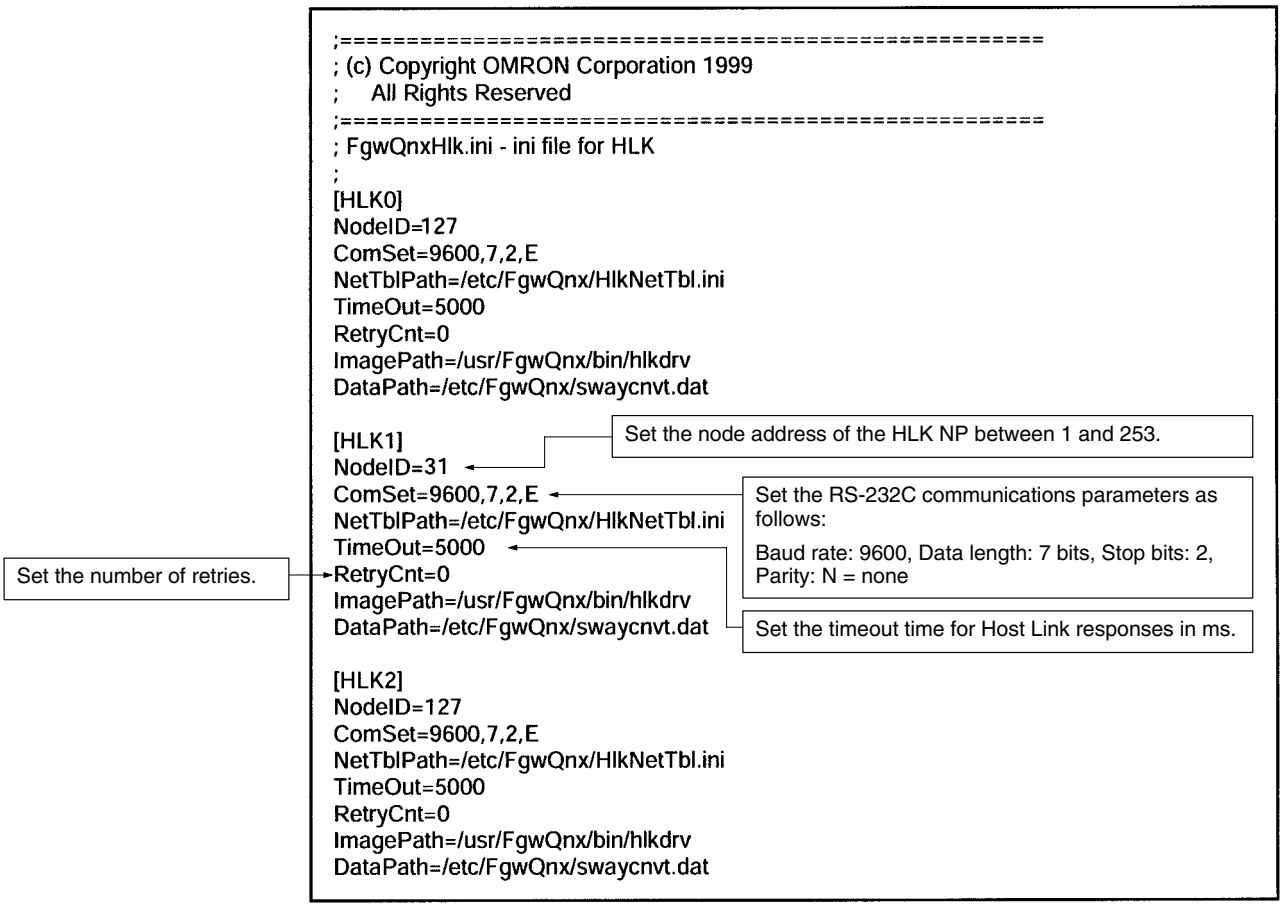

/etc/FgwQnx/HlkNetTbl.ini contains the setting file for C-series Host Link (SYSMAC WAY) and CV-series Host Link (SYSMAC WAY-CV). Set the unit address, protocol, and model name.

```
;=====================================================
;(c) Copyright OMRON Corporation 1999
;   All Rights Reserved
;=====================================================
;HlkNetTbl.ini-ini file for HLK-NET_TABLE
;
[HLK0]
1,0,SYSWAY,C200H
2,0,SYSWAY,C200HS
3,0,SYSWAY,C200HG
4,0,SYSWAY,C200HX
5,0,SYSWAY,C200HX-CPU65-Z
6,0,SYSWAY,C200HX-CPU85-Z
7,0,SYSWAY,200HE
8,0,SYSWAY,CQM1
9,0,SYSWAY,CPM1/CPM1A
10,0,SYSWAY,SRM1
11,0,SYSWAY,CV500
12,0,SYSWAY,CVM1-CPU01
13,0,SYSWAY,CVM1-CPU11
14,0,SYSWAY,CVM1-CPU21
15,0,SYSWAY,CV1000/CV2000
16,0,SYSWAY,C20
17,0,SYSWAY,C20H/C28H/C40H/C60H
18,0,SYSWAY,C20/28/40/60P
19,0,SYSWAY,C20/28/40/60PF
20,0,SYSWAY,C50
21,0,SYSWAY,C120/C120F
22,0,SYSWAY,C500
23,0,SYSWAY,C500F
24,0,SYSWAY,C1000H
25,0,SYSWAY,C1000HF
26,0,SYSWAY,C2000H
27,0,SYSWAY,CS1-CPU67
28,0,SYSWAY,CS1-CPU66
29,0,SYSWAY,CS1-CPU65/45
30,0,SYSWAY,CS1-CPU64/44
31,0,SYSWAY,CS1-CPU63/43/42

[HLK1]
1,1,SYSWAY,C200HX
2,2,SYSWAY-CV,CVM1-CPU01

[HLK2]
1,0,Compoway,Other
2,1,Compoway,Other
3,2,Compoway,Other
```

Set the FINS node address, unit address, protocol, and model in order, separating each with a comma.

The setting ranges are as follows:

FINS node address:	1 to 253
Unit address:	0 to 255
Protocol:	SYSWAY = C-series Host Link SYSWAY-CV = CV-series Host Link Compoway/F = CompoWay/F

Sets FINS node address 1 to unit address 1 of COM2 with the C-series Host Link protocol (SYSWAY). The model is C200HX.

Sets FINS node address 2 to unit address 2 of COM2 with the CV-series Host Link protocol (SYSWAY-CV). The model is CVM1.

SECTION 5
FINS Commands

This section individually describes the FINS commands and responses for CPU_UNIT and the network providers (NPs). Refer to the the *FINS Commands Reference Manual* (W227) for further information on FINS commands.

5-1 Overview 117
5-2 FINS Commands Addressed to CPU_Unit 117
5-2-1 MEMORY AREA READ: 01 01 118
5-2-2 MEMORY AREA WRITE: 01 02 119
5-2-3 PARAMETER AREA READ: 02 01 120
5-2-4 PARAMETER AREA WRITE: 02 02 121
5-2-5 PARAMETER AREA CLEAR: 02 03 122
5-2-6 ROUTING TABLE SET: 02 25 123
5-2-7 CONTROLLER DATA READ: 05 01 123
5-2-8 CONNECTION DATA READ: 05 02 124
5-2-9 CLOCK READ: 07 01 124
5-2-10 CLOCK WRITE: 07 02 125
5-2-11 TIME COMPENSATION (Unit Version 1.1 or Later): 07 03 125
5-2-12 LOOPBACK TEST: 08 01 127
5-3 FINS Commands Addressed to ETN_UNIT 128
5-3-1 CONTROLLER DATA READ: 05 01 128
5-3-2 IP ADDRESS TABLE WRITE: 27 50 128
5-3-3 IP ADDRESS TABLE READ: 27 60 129
5-3-4 ADDRESS INFORMATION READ: 27 65 129
5-4 FINS Commands Addressed to HLK_UNIT 131
5-4-1 FINS Commands for the C-series Host Link Protocol 131
5-4-2 MEMORY AREA READ: 01 01 132
5-4-3 MEMORY AREA WRITE: 01 02 133
5-4-4 Memory Area Designations 134
5-4-5 RUN: 04 01 149
5-4-6 STOP: 04 02 150
5-4-7 CONTROLLER DATA READ: 05 01 151
5-4-8 CONTROLLER STATUS READ: 06 01 152
5-4-9 LOOPBACK TEST: 08 01 153
5-4-10 FILE MEMORY INDEX READ: 22 0F 154
5-4-11 FILE MEMORY READ: 22 10 155
5-4-12 FILE MEMORY WRITE:22 11 155
5-4-13 FORCED SET/RESET: 23 01 156
5-4-14 FORCED SET/RESET CANCEL: 23 02 156
5-4-15 FINS Commands for the CV-series Host Link Protocol 157
5-4-16 FINS Commands for the CompoWay/F Protocol 157
5-5 FINS Commands Addressed to DRM_UNIT 158
5-5-1 RUN: 04 01 158
5-5-2 STOP: 04 02 159
5-5-3 RESET: 04 03 159
5-5-4 CONTROLLER DATA READ: 05 01 160
5-5-5 LOOPBACK TEST: 08 01 160
5-5-6 EXPLICIT MESSAGE SEND: 28 01 161
5-6 FINS Commands Addressed to CLK_UNIT 162

5-7 FINS Commands Addressed to SYSMAC_UNIT 162
5-7-1 Memory Area Designations 163
5-7-2 MEMORY AREA READ: 01 01 164
5-7-3 MEMORY AREA WRITE: 01 02 165
5-7-4 RUN: 04 01 166
5-7-5 STOP: 04 02 166
5-7-6 CONTROLLER DATA READ: 05 01 167
5-7-7 CONTROLLER STATUS READ: 06 01 168
5-7-8 CLOCK READ: 07 01 169
5-7-9 CLOCK WRITE: 07 02 169
5-7-10 CONTROLLER DATA READ: 05 01 170
5-8 End Codes 171

5-1 Overview

The Open Network Controller converts FINS commands to the suitable communications protocol for the network for which the commands are intended.

The FINS commands that can be used for CPU_UNIT or the NPs are different. There are also some differences in conversion rules depending on the network receiving the command.

Refer to the following sections for details on FINS commands for CPU_UNIT and the NPs.

Contents	Section
FINS commands addressed to CPU_UNIT	5-2
FINS commands addressed to ETN_UNIT	5-3
FINS commands addressed to HLK_UNIT	5-4
FINS commands addressed to DRM_UNIT	5-5
FINS commands addressed to CLK_UNIT	5-6
FINS commands addressed to SYSMAC_UNIT	5-7

Refer to *5-8 End Codes* for information on end codes.

5-2 FINS Commands Addressed to CPU_Unit

This section describes the FINS commands that can be addressed to CPU_UNIT. These commands are listed in the following table.

Command code	Name and function
01 01	MEMORY AREA READ: Reads event memory
01 02	MEMORY AREA WRITE: Writes event memory
02 01	PARAMETER AREA READ: Reads the routing tables
02 02	PARAMETER AREA WRITE: Writes the routing tables
02 03	PARAMETER AREA CLEAR: Clears the routing tables
02 25	ROUTING TABLE SET
05 01	CONTROLLER DATA READ
05 02	CONNECTION DATA READ
07 01	CLOCK READ
07 02	CLOCK WRITE
07 03	TIME COMPENSATION (unit version 1.1 or later)
08 01	INTERNODE ECHO TEST

CPU_UNIT performs the FINS message communications functions of a CPU Unit for a PLC. In particular, it provides the access functions required by personal computers and other devices on an Ethernet network to read and write event memory in the Open Network Controller.

The unit address of CPU_UNIT is 0. When accessing the CPU_UNIT at a specific node on a network using FINS message communications, specify 0 as the unit address in the destination FINS addresses.

5-2-1 MEMORY AREA READ: 01 01

Reads the contents of the specified number of consecutive words starting from the specified word in event memory.

Command Format

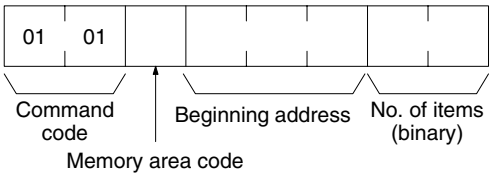

Response Format

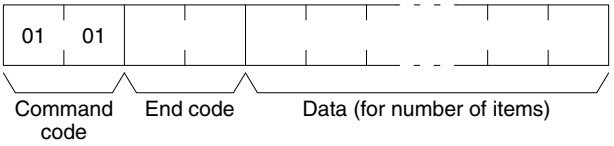

Parameters

Memory area code, beginning address, number of items (command)
Specify the type of data to be read, the beginning address of the data to be read, and the number of items of data to be read.

The memory areas that can be read are given in the following table. Refer to *Memory Area Designations* later in this section for the specific addresses that can be used.

Area	Data type	Memory area code (hex)	Bytes per item
CIO area	Bit ON/OFF status	00	1
	Word contents	80	2
DM area	Bit ON/OFF status	02	1
	Word contents	82	2

Data (response)
The data from the specified memory area is returned in sequence starting from the beginning address. The required number of bytes in total is calculated as follows: Number of bytes required by each item x number of items

For details regarding data configuration, refer to *Memory Area Designations* later in this section.

End code (response)
Refer to *5-8 End Codes* for information on end codes.

Memory Area Designations

The memory area codes given in the following table are used to specify addresses to access in the event memory using FINS commands. “Bytes per item” indicates the number of bytes required in the FINS command or response for each item being accessed.

Area	Data type	Access length	Memory area code (hex)	Bytes per item
CIO area	General purpose	Bits	00	1
		Words	80	2
DM area	General purpose	Bits	02	1
		Words	82	2

Memory area addresses are designated in three bytes. The first and second byte are the word address and the third byte is the bit position when accessing bits.

When accessing bits, a maximum of 16 bits (i.e., items) can be accessed and they must all be in the same word.

When accessing words, specify 00 as the bit position (i.e., as the third byte).

5-2-2 MEMORY AREA WRITE: 01 02

Writes data to the specified number of consecutive words starting from the specified word.

Command Format

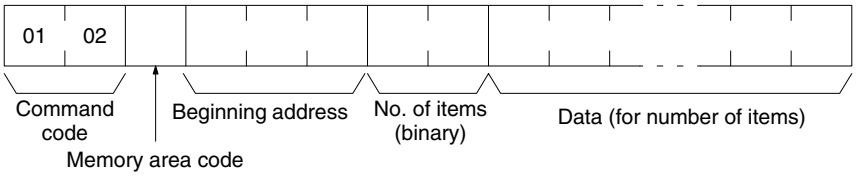

Response Format

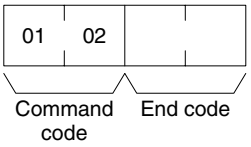

Parameters

Memory area code, beginning address, number of items (command)
Specify the type of data to be written, the beginning address of the data to be written, and the number of items of data to be written.

The memory areas that can be read are given in the following table. Refer to *Memory Area Designations* under *5-2-1 MEMORY AREA READ* for the specific addresses that can be used.

Area	Data type	Memory area code (hex)	Bytes per item
CIO area	Bit ON/OFF status	00	1
	Word contents	80	2
DM area	Bit ON/OFF status	02	1
	Word contents	82	2

Data (command)
The data to be written to the specified memory area is provided in sequence starting from the beginning address. The required number of bytes in total is calculated as follows:

Number of bytes required by each item x number of items

For details regarding data configuration, refer to *Memory Area Designations* under *5-2-1 MEMORY AREA READ*.

End code (response)
Refer to *5-8 End Codes* for information on end codes.

Precautions

When writing bit ON/OFF status, a maximum of 16 bits (i.e., items) can be written in one command and they must all be in the same word.

5-2-3 PARAMETER AREA READ: 02 01

Reads the contents of the routing tables.

Command Format

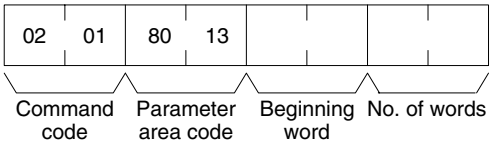

Response Format

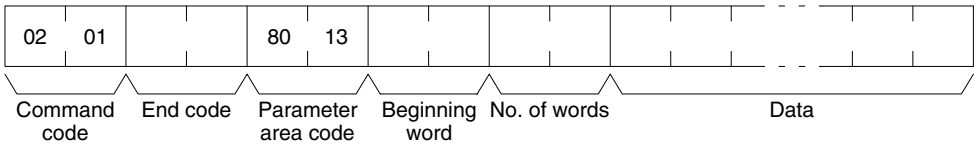

Parameters

Parameter area code (command and response)
Specify the routing table area as the parameter area. The parameter area code is always 8013.

Beginning word (command and response)
Specify the first word to read. The beginning word address specifies the relative word address, with the beginning of the routing table as 0000 (hex). The following addresses can be used.

0000: Beginning of routing tables
0000: Beginning of local network table
0011: Beginning of relay network table

Number of words (command and response)
Bits 0 to 14 are used to specify the number of words to be read. (Each word consists of 16 bits.) Bit 15 must be OFF (0) in the command format. When the content in the response format contains the last word of data in the specified parameter area, bit 15 will be ON (1).

The number of words data will be as follows when reading the routing tables:

Reading all the routing tables: 30 Hex (96 bytes)
Reading all of the local network table: 11 Hex (34 bytes)
Reading all of the relay network table: 1F Hex (62 bytes)

Data (response)
The specified data will be returned in sequence starting from the beginning word. The leftmost bits (bits 8 to 15) of each word are read first, followed by the rightmost bits (bits 0 to 7). The required number of bytes in total for each read is calculated as follows:

Number of words x 2 (each word consists of 2 bytes, or 16 bits)

End code (response)
Refer to *5-8 End Codes* for information on end codes.

5-2-4 PARAMETER AREA WRITE: 02 02

Writes data to the specified number of consecutive routing table area words starting from the specified word. To use the new routing tables, execute ROUTING TABLE SET (02 25) after executing this command.

Command Format

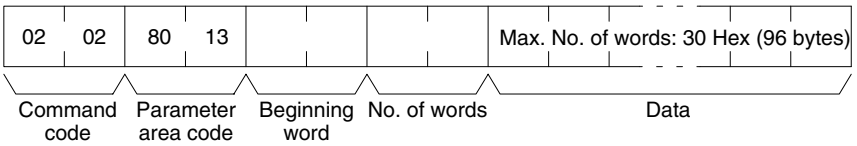

Response Format

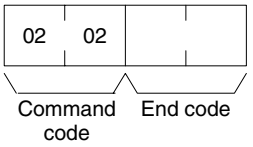

Parameters

Parameter area code (command and response)

Specify the routing table area as the parameter area. The parameter area code is always 8013.

Beginning word (command and response)

Specify the first word to write. The beginning word address specifies the relative word address, with the beginning of the routing table as 0000 (hex). The following addresses can be used.

0000: Beginning of routing tables
0000: Beginning of local network table
0011: Beginning of relay network table

Number of words (command and response)

Bits 0 to 14 are used to specify the number of words to be written. (Each word consists of 16 bits.) Bit 15 must be OFF (0) in the command format. When the content in the response format contains the last word of data in the specified parameter area, bit 15 will be ON (1).

The number of words data will be as follows when writing the routing tables:

Writing all the routing tables:	30 Hex (96 bytes)
Writing all of the local network table:	11 Hex (34 bytes)
Writing all of the relay network table:	1F Hex (62 bytes)

Data (command)

Specify the data to be written. The leftmost bits (bits 15 to 8) of each word must be specified first, followed by the rightmost bits (bits 7 to 0). The required number of bytes in total for each write can be calculated as follows:

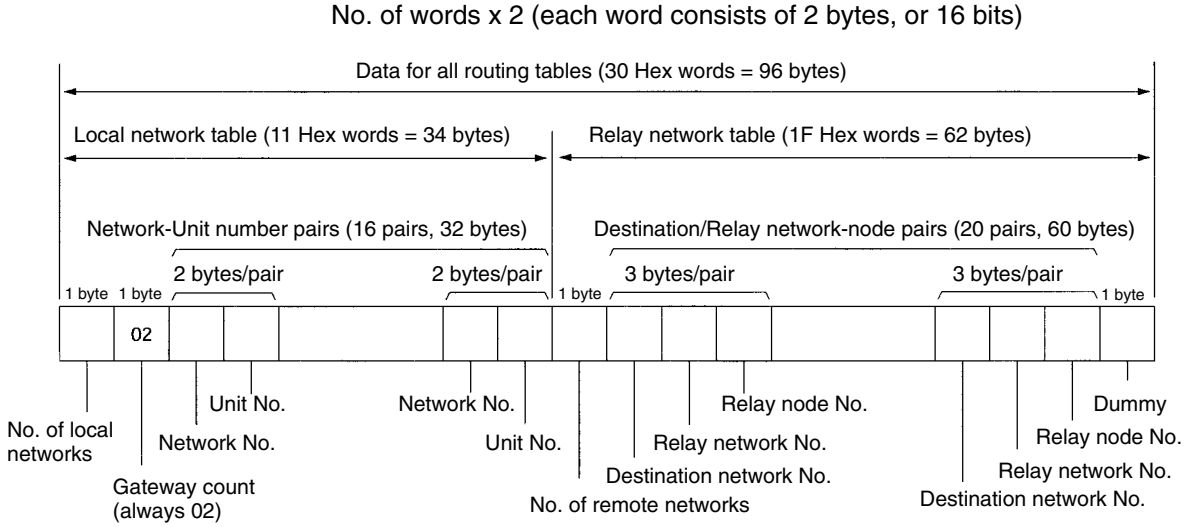

End code (response)
Refer to *5-8 End Codes* for information on end codes.

5-2-5 PARAMETER AREA CLEAR: 02 03

Writes all zeros to the routing table area to clear the previous routing tables.

Command Format

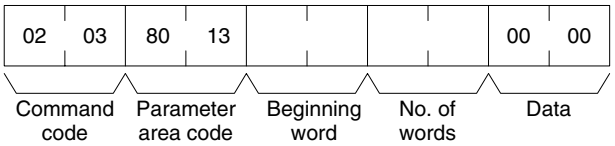

Response Format

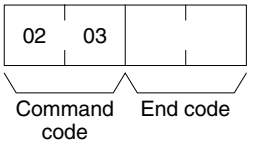

Parameters

Parameter area code (command)
Specify the routing table area as the parameter area. The parameter area code is always 8013.

Beginning word and Number of words (command)
Use the following settings.

Tables	Beginning word	Number of words
All routing tables	0000	0030 (96 bytes)
Local network table	0000	0011 (34 bytes)
Relay network table	0011	001F (62 bytes)

Note All of the routing tables will be cleared if FFFF is specified as the number of words.

Data (command)
Set to 0000. The number of words to be cleared is specified by the number of words in the command format. This parameter requires only two bytes (one word) of data.

End code (response)
Refer to *5-8 End Codes* for information on end codes.

5-2-6 ROUTING TABLE SET: 02 25

Sets the routing tables in the Open Network Controller. This command must be executed to enable the routing tables set with the ROUTING TABLE WRITE command (02 02). If ROUTING TABLE SET ends normally, the routing tables will be written to /etc/FgwQnx/FgwQnx.ini.

Command Format

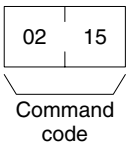

Response Format

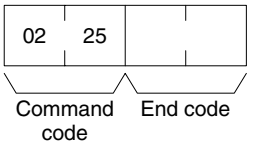

Parameters

End code (response)
Refer to *5-8 End Codes* for information on end codes.

5-2-7 CONTROLLER DATA READ: 05 01

Reads the following data from the Open Network Controller.

- The model of CPU_UNIT that is running.
- The version of CPU_UNIT that is running.

Command Format

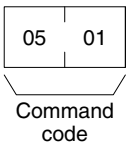

Response Format

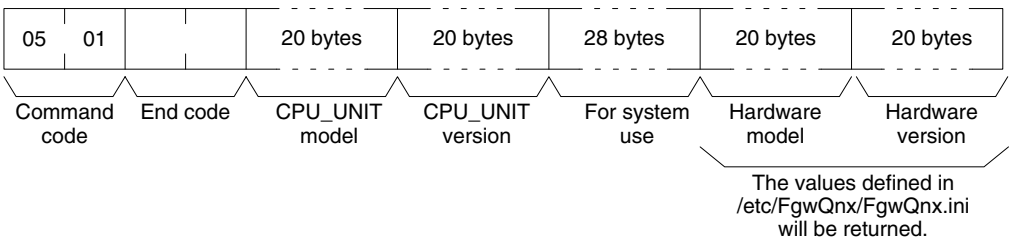

Parameters

CPU Unit model and version (response)
Each is returned in not more than 20 bytes in ASCII (i.e., 20 ASCII characters). If the model or version requires less than 20 characters, spaces will be inserted to fill the remainder.

End code (response)
Refer to *5-8 End Codes* for information on end codes.

5-2-8 CONNECTION DATA READ: 05 02

Reads the model numbers (names) of Units (NPs) corresponding of the specified unit addresses.

Command Format

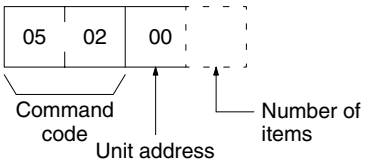

Response Format

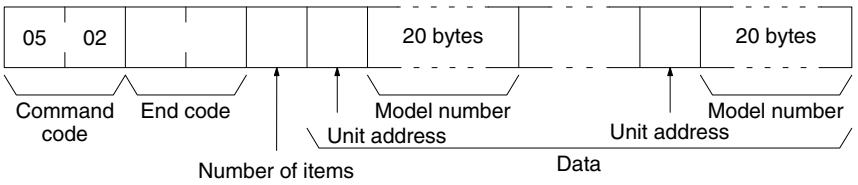

Parameters

Unit address (command and response)
Specify the first unit address for which information is to be read. Always specify 00 as the unit address.

Number of items (command)
Specify the number of items to be read. The number of items will be returned in order for the number specified, beginning with the unit address set in the "unit address" parameter. If the number of items is not specified, information will be read for all unit addresses.

Number of items (response)
The number of unit addresses (applications) for which the connection data is being returned. If bit 7 is ON (1), it means that the data for the last unit address is being returned.

Unit address and model number (response)
The unit address and model number (name) of the NP. The name is provided in up to 20 ASCII characters. Data will be returned for the specified number of items.

End code (response)
Refer to *5-8 End Codes* for information on end codes.

5-2-9 CLOCK READ: 07 01

Reads clock information.

Command Format

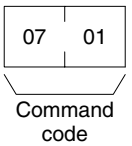

Response Format

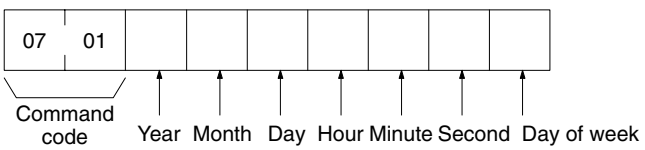

Parameters

Year, month, day, hour, minute, second, day of week (response)

The year, month, day of month, hour, minute, and second are expressed in BCD.

Year: The rightmost two digits of the year. (Any value under 70 will be after the year 2000.)

Hour: 00 to 23 (BCD).

Day of week: As follows:

Value (Hex)	00	01	02	03	04	05	06
Day of week	Sun	Mon	Tues	Wed	Thur	Fri	Sat

End code (response)

Refer to *5-8 End Codes* for information on end codes.

5-2-10 CLOCK WRITE: 07 02

Immediately updates the time with the specified time data.

Command Format

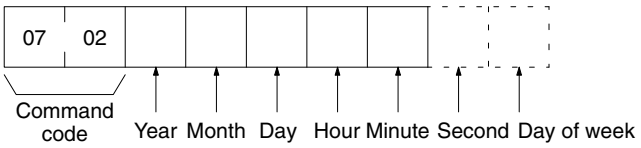

Response Format

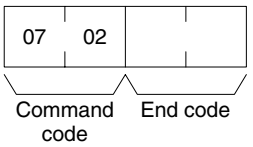

Parameters

Year, month, day, hour, minute, second, day of week (command)

The year, month, day of month, hour, minute, and second are expressed in BCD. The second data may be omitted. The day of week data may also be omitted. It will not be used even if specified (see below.)

Year: The rightmost two digits of the year. (Any value under 70 will be after the year 2000.)

Hour: 00 to 23 (BCD).

Day of week: The day of the week will be calculated from the year, month, and day. The value in the command will be ignored.

Value (Hex)	00	01	02	03	04	05	06
Day of week	Sun	Mon	Tues	Wed	Thur	Fri	Sat

End code (response)

Refer to *5-8 End Codes* for information on end codes.

Precautions

This command immediately updates the time to the specified time data.

For unit version 1.1 or later, OS tick interrupts are prohibited when the time data is written. Caution is thus required when running an application requiring real-time performance.

The continuity of time data may be lost before and after writing time data, depending on the time data settings. Problems may occur when running applications that must be executed periodically at specific intervals. Use the TIME COMPENSATION command (07 03) in such cases.

5-2-11 TIME COMPENSATION (Unit Version 1.1 or Later): 07 03

Compensates time data gradually.

Command Format

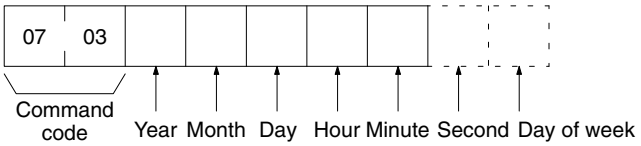

Item	Setting
Year	Specify the last two digits of the year in BCD. Values less than 70 are for years in the 21st century.
Month	Specify the last two digits of the year in BCD. Values less than 70 are for years in the 21st century.
Day of month	Specify in BCD.
Hour	Specify in BCD between 00 and 23.
Minutes	Specify in BCD.
Seconds	Optional. Specify in BCD. To omit, specify 00.
Day of week	Optional. A value can be specified. The day of the week, however, is calculated based on the year/month/day settings and any setting is ignored.

Response Format

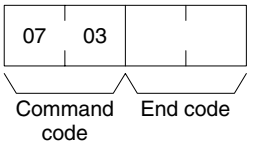

Precautions

Unlike the CLOCK WRITE command (07 02), the TIME COMPENSATION command does not immediately update the time to the specified time data, but compensates the time data gradually during the intervals between OS tick interrupts so that the time data gradually approaches the actual time.

If you specify in the command parameters a time that is ahead of the present clock data (called positive compensation), the intervals between ticks will become shorter. Conversely, if you specify a time that is behind the present clock data (called negative compensation), the intervals between ticks become longer. This command can thus be used to speed up or slow down the time data until compensation has been completed, at which time the time data will be the same as the actual time.

Gradually compensating the time data to approach the actual time requires a certain amount of time before the compensation processing is completed. A rough estimate of the time until the completion of compensation can be obtained using the following method.

1. Execute the CLOCK READ command (07 01) to confirm the present clock data, and then determine the difference between the actual time and the clock data.

2. The time until the completion of compensation will be approximately 10 times the difference.

For example, assume the present clock data is 10:05.05 and the actual time is 10:07.00. A positive compensation of 2 minutes is required; therefore, compensation completion will require approximately 20 minutes.

The tick interval will be faster for approximately 20 minutes from execution of the 0703 command, speeding up refreshing of the clock data. As a result, the time data equal the actual time of 10:27.00 after 20 minutes has passed, and the tick interval will return to normal.

The TIME COMPENSATION command (07 03) cannot be executed again before completion of time compensation. If execution of the TIME COMPENSATION command (07 03) command is attempted during time compensation, an end code of 26 05 (service executing) will be returned.

The maximum time compensation possible is 30 minutes. If a value for a time difference exceeding 30 minutes is specified in the parameters, an end code of 11 04 (exceeds permissible range) will be returned.

5-2-12 LOOPBACK TEST: 08 01

Executes a loopback test with CPU_UNIT.

Command Format

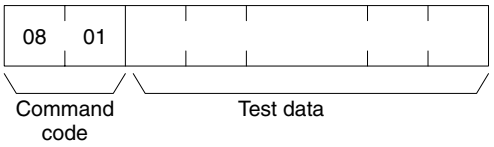

Response Format

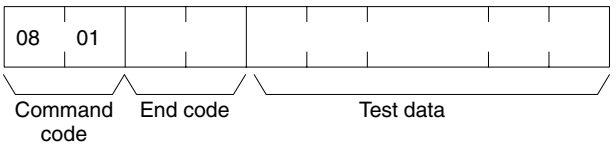

Parameters

Test data (command and response)

In the command block, designate the data to be transmitted to CPU_UNIT. In the response block, the test data from the command block will be returned as it is. If the test data in the response block is different from that in the command block, an error has occurred.

5-3 FINS Commands Addressed to ETN_UNIT

This section describes the FINS commands that can be addressed to ETN_UNIT. These commands are listed in the following table.

Command code	Name
05 01	CONTROLLER DATA READ
27 50	IP ADDRESS TABLE WRITE
27 60	IP ADDRESS TABLE READ
27 65	ADDRESS DATA READ

5-3-1 CONTROLLER DATA READ: 05 01

Reads the following data from the ETN_UNIT running on the Open Network Controller.

- Model
- Version

Command Format

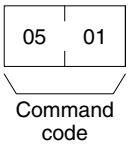

Response Format

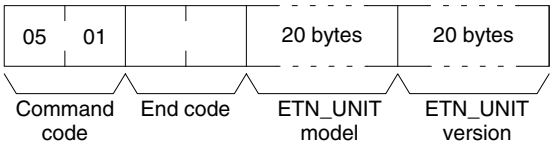

Parameters

ETN_UNIT model and version (response)
Each is returned in not more than 20 bytes in ASCII (i.e., 20 ASCII characters). If the model or version requires less than 20 characters, spaces will be inserted to fill the remainder.

End code (response)
Refer to *5-8 End Codes* for information on end codes.

5-3-2 IP ADDRESS TABLE WRITE: 27 50

Writes the IP address table in ETN_UNIT.

Command Format

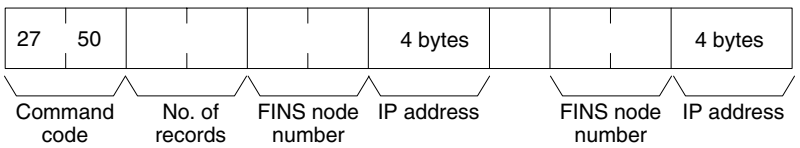

Response Format

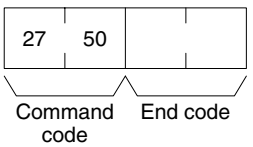

Parameters

Number of records (command)
The number of records to write is specified between 0000 and 0020 Hex (0 to 32 decimal) in the command. If this value is set to 0, the IP address table will be cleared so that no records are registered.

FINS node number and IP address (command)
Specify the FINS node number and corresponding IP address for nodes with which communications will be performed. Up to 32 pairs can be specified.

End code (response)
Refer to *5-8 End Codes* for information on end codes.

5-3-3 IP ADDRESS TABLE READ: 27 60

Reads the IP address table in ETN_UNIT.

Command Format

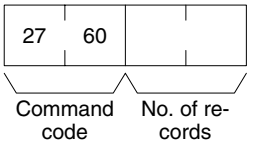

Response Format

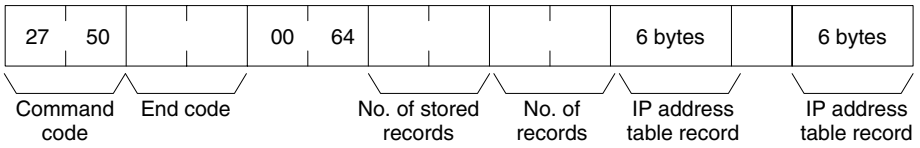

Parameters

Number of records (command, response)
The number of records to read is specified between 0000 and 0020 Hex (0 to 32 decimal) in the command. If this value is set to 0, the number of stored records is returned but the IP address table records are not returned.

The response returns the actual number of records read.

Number of stored records (response)
The number of IP address table records stored at the time the command is executed is returned as a hexadecimal number.

IP address table records (response)
The number of IP address table records specified in the number of records parameter is returned. The total number of bytes in the IP address table records is calculated as the number of records x 6 bytes/record. The configuration of the 6 bytes of data in each record is as shown in the following diagram.

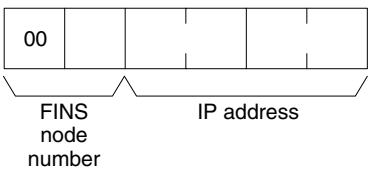

End code (response)
Refer to *5-8 End Codes* for information on end codes.

5-3-4 ADDRESS INFORMATION READ: 27 65

Read FINS node numbers and IP addresses.

Command Format

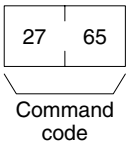

Response Format

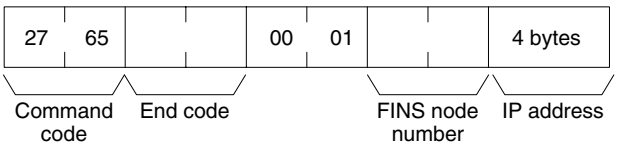

Parameters

FINS node number and IP address (response)

The currently set FINS node number and IP address are returned as hexadecimal values.

5-4 FINS Commands Addressed to HLK_UNIT

Supported Serial Communications Protocols

The following three serial communications protocols are supported by the Open Network Controller.
C-series Host Link (SYSMAC WAY)
CV-series Host Link (SYSMAC WAY)
CompoWay/F

HLK_UNIT converts FINS commands to commands in the above protocols.

The FINS commands supported by HLK_UNIT are described in this section by protocol.

5-4-1 FINS Commands for the C-series Host Link Protocol

This section describes the FINS commands that can be used with the C-series Host Link protocol.

FINS Commands

Command code	Name
0101	READ MEMORY AREA
0102	WRITE MEMORY AREA
0401	RUN
0402	STOP
0501	CONTROLLER DATA READ
0601	CONTROLLER STATUS READ
0801	LOOPBACK TEST
220F	FILE MEMORY INDEX READ (see note)
2210	FILE MEMORY READ (see note)
2211	FILE MEMORY WRITE (see note)
2301	FORCED SET/RESET
2302	FORCED SET/RESET CANCEL

Note The commands for file memory can be used only for the C1000H, C1000HF, and C2000H.

Applicable PLCs

The following PLCs support the C-series Host Link protocol.

C20, C50, C120, C120F, C20H/C28H/C40H/C60H, C20P/C28P/C40P/C60P, C20PF/C28PF/C40PF/C60PF, C500, C500F, C1000H, C1000HF, C2000H, C200H, C200HS, C200HX/HG/HE, CQM1, CPM1, CPM1A, CPM2A, CPM2C, SRM1, CV500, CVM1, CV1000, CV2000, and CS1.

5-4-2 MEMORY AREA READ: 01 01

Reads the contents of the specified number of consecutive memory area words starting from the specified word.

Command Format

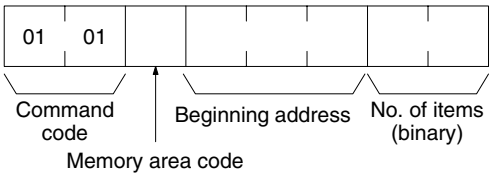

Response Format

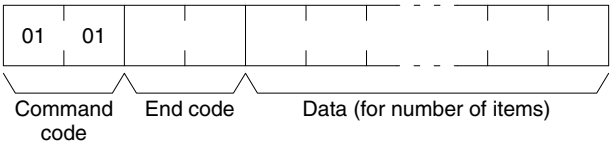

Parameters

Memory area code, beginning address, number of items (command)
Specify the type of data to be read, the beginning address of the data to be read, and the number of items of data to be read.

Refer to *5-4-4 Memory Area Designations* for the specific addresses that can be used.

Data (response)
The data from the specified memory area is returned in sequence starting from the beginning address. The required number of bytes in total is calculated as follows: Number of bytes required by each item x number of items

For details regarding data configuration, refer to *5-4-4 Memory Area Designations*.

End code (response)
Refer to *5-8 End Codes* for information on end codes.

5-4-3 MEMORY AREA WRITE: 01 02

Writes data to the specified number of consecutive words starting from the specified word.

Command Format

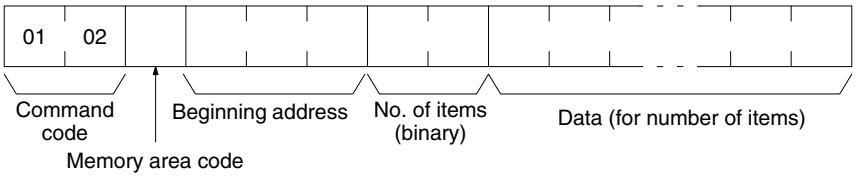

Response Format

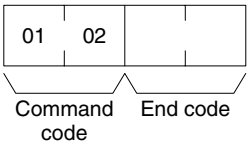

Parameters

Memory area code, beginning address, number of items (command)
Specify the type of data to be written, the beginning address of the data to be written, and the number of items of data to be written.

The memory areas that can be read are given in the following table. Refer to *5-4-4 Memory Area Designations* for the specific addresses that can be used.

Data (command)
The data to be written to the specified memory area is provided in sequence starting from the beginning address. The required number of bytes in total is calculated as follows:

Number of bytes required by each item x number of items

For details regarding data configuration, refer to *5-4-4 Memory Area Designations*.

End code (response)
Refer to *5-8 End Codes* for information on end codes.

5-4-4 Memory Area Designations

This section provides tables of the memory area designations for each PLC that are supported by FINS and Host Link commands. The following terms are used in the tables.

Command:
The hexadecimal FINS command code or ASCII Host Link command code.

Memory area code:
The memory area code used within FINS commands.

Offset:
The offset of each PLC memory area (e.g., CIO, LR, DM, etc.). These indicate the beginning addresses of the memory areas used in Host Link commands within the areas defined by memory area codes for FINS commands.

Size:
The size of the memory area in hexadecimal.

C200H

Command code		Memory area code	Offset	Size	Application
01	01	80	0000	0100	IR/SR area read
			03E8	0040	LR area read
			0428	0064	HR area read
			048C	001C	AR area read
		01	0000	0200	Timer/counter Completion Flag read
		81	0000	0200	Timer/counter PV read
		82	0000	07D0	DM area read
	02	80	0000	0100	IR/SR area write
			03E8	0040	LR area write
			0428	0064	HR area write
			048C	001C	AR area write
		01	0000	0200	Timer/counter Completion Flag write
		81	0000	0200	Timer/counter PV write
		82	0000	07D0	DM area write

C200HS

Command code		Memory area code	Offset	Size	Application
01	01	80	0000	0100	IR/SR area read
			03E8	0040	LR area read
			0428	0064	HR area read
			048C	001C	AR area read
		01	0000	0200	Timer/counter Completion Flag read
		81	0000	0200	Timer/counter PV read
		82	0000	2710	DM area read
	02	80	0000	0200	IR/SR area write
			03E8	0040	LR area write
			0428	0064	HR area write
			048C	001C	AR area write
		01	0000	0200	Timer/counter Completion Flag write
		81	0000	0200	Timer/counter PV write
		82	0000	2710	DM area write

C200HG

Command code		Memory area code	Offset	Size	Application
01	01	80	0000	0200	IR/SR area read
			03E8	0040	LR area read
			0428	0064	HR area read
			048C	001C	AR area read
		01	0000	0200	Timer/counter Completion Flag read
		81	0000	0200	Timer/counter PV read
		82	0000	2710	DM area read
		90	0000	1800	EM bank 0 read
		98	0000	1800	EM current bank read
	02	80	0000	0200	IR/SR area write
			03E8	0040	LR area write
			0428	0064	HR area write
			048C	001C	AR area write
		01	0000	0200	Timer/counter Completion Flag write
		81	0000	0200	Timer/counter PV write
		82	0000	2710	DM area write
		90	0000	1800	EM bank 0 write
		98	0000	1800	EM current bank write

C200HX

Command code		Memory area code	Offset	Size	Application
01	01	80	0000	0200	IR/SR area read
			03E8	0040	LR area read
			0428	0064	HR area read
			048C	001C	AR area read
		01	0000	0200	Timer/counter Completion Flag read
		81	0000	0200	Timer/counter PV read
		82	0000	2710	DM area read
		90 to 92	0000	1800	EM bank read for bank 0 to 2
		98	0000	1800	EM current bank read
	02	80	0000	0200	IR/SR area write
			03E8	0040	LR area write
			0428	0064	HR area write
			048C	001C	AR area write
		01	0000	0200	Timer/counter Completion Flag write
		81	0000	0200	Timer/counter PV write
		82	0000	2710	DM area write
		90 to 92	0000	1800	EM bank write for bank 0 to 2
		98	0000	1800	EM current bank write

C200HX-CPU65-Z

Command code		Memory area code	Offset	Size	Application
01	01	80	0000	0200	IR/SR area read
			03E8	0040	LR area read
			0428	0064	HR area read
			048C	001C	AR area read
		01	0000	0200	Timer/counter Completion Flag read
		81	0000	0200	Timer/counter PV read
		82	0000	2710	DM area read
		90 to 97	0000	1800	EM bank read for bank 0 to 7
		98	0000	1800	EM current bank read
	02	80	0000	0200	IR/SR area write
			03E8	0040	LR area write
			0428	0064	HR area write
			048C	001C	AR area write
		01	0000	0200	Timer/counter Completion Flag write
		81	0000	0200	Timer/counter PV write
		82	0000	2710	DM area write
		90 to 97	0000	1800	EM bank write for bank 0 to 7
		98	0000	1800	EM current bank write

C200HX-CPU85-Z

Command code		Memory area code	Offset	Size	Application
01	01	80	0000	0200	IR/SR area read
			03E8	0040	LR area read
			0428	0064	HR area read
			048C	001C	AR area read
		01	0000	0200	Timer/counter Completion Flag read
		81	0000	0200	Timer/counter PV read
		82	0000	2710	DM area read
		90 to 97	0000	1800	EM bank read for bank 0 to 7
		A8 to AF	0000	1800	EM bank read for bank 8 to F
		98	0000	1800	EM current bank read
	02	80	0000	0200	IR/SR area write
			03E8	0040	LR area write
			0428	0064	HR area write
			048C	001C	AR area write
		01	0000	0200	Timer/counter Completion Flag write
		81	0000	0200	Timer/counter PV write
		82	0000	2710	DM area write
		90 to 97	0000	1800	EM bank write for bank 0 to 7
		A8 to AF	0000	1800	EM bank write for bank 8 to F
		98	0000	1800	EM current bank write

C200HE

Command code		Memory area code	Offset	Size	Application
01	01	80	0000	0200	IR/SR area read
			03E8	0040	LR area read
			0428	0064	HR area read
			048C	001C	AR area read
		01	0000	0200	Timer/counter Completion Flag read
		81	0000	0200	Timer/counter PV read
		82	0000	2710	DM area read
	02	80	0000	0200	IR/SR area write
			03E8	0040	LR area write
			0428	0064	HR area write
			048C	001C	AR area write
		01	0000	0200	Timer/counter Completion Flag write
		81	0000	0200	Timer/counter PV write
		82	0000	2710	DM area write

CQM1

Command code		Memory area code	Offset	Size	Application
01	01	80	0000	0100	IR/SR area read
			03E8	0040	LR area read
			0428	0064	HR area read
			048C	001C	AR area read
		01	0000	0200	Timer/counter Completion Flag read
		81	0000	0200	Timer/counter PV read
		82	0000	1A00	DM area read
	02	80	0000	0100	IR/SR area write
			03E8	0040	LR area write
			0428	0064	HR area write
			048C	001C	AR area write
		01	0000	0200	Timer/counter Completion Flag write
		81	0000	0200	Timer/counter PV write
		82	0000	1A00	DM area write

CPM1/CPM1A

Command code		Memory area code	Offset	Size	Application
01	01	80	0000	0100	IR/SR area read
			03E8	0010	LR area read
			0428	0014	HR area read
			048C	0010	AR area read
		01	0000	0080	Timer/counter Completion Flag read
		81	0000	0080	Timer/counter PV read
		82	0000	1A00	DM area read
	02	80	0000	0100	IR/SR area write
			03E8	0010	LR area write
			0428	0014	HR area write
			048C	0010	AR area write
		01	0000	0080	Timer/counter Completion Flag write
		81	0000	0080	Timer/counter PV write
		82	0000	1A00	DM area write

CPM2A/CPM2C

Command code		Memory area code	Offset	Size	Application
01	01	80	0000	0100	IR/SR area read
			03E8	0010	LR area read
			0428	0014	HR area read
			048C	0018	AR area read
		01	0000	0100	Timer/counter Completion Flag read
		81	0000	0010	Timer/counter PV read
		82	0000	1A00	DM area read
	02	80	0000	0100	IR/SR area write
			03E8	0010	LR area write
			0428	0014	HR area write
			048C	0018	AR area write
		01	0000	0100	Timer/counter Completion Flag write
		81	0000	0100	Timer/counter PV write
		82	0000	1A00	DM area write

SRM1

Command code		Memory area code	Offset	Size	Application
01	01	80	0000	0100	IR/SR area read
			03E8	0010	LR area read
			0428	0014	HR area read
			048C	0010	AR area read
		01	0000	0080	Timer/counter Completion Flag read
		81	0000	0080	Timer/counter PV read
		82	0000	1A00	DM area read
	02	80	0000	0100	IR/SR area write
			03E8	0010	LR area write
			0428	0014	HR area write
			048C	0010	AR area write
		01	0000	0080	Timer/counter Completion Flag write
		81	0000	0080	Timer/counter PV write
		82	0000	1A00	DM area write

CV500

Command code		Memory area code	Offset	Size	Application
01	01	80	0000	09FC	CIO area read
			0B00	0200	Auxiliary area read
		81	0000	0200	TimerPV read
			0800	0200	Counter PV read
		01	0000	0200	Timer Completion Flag read
			0800	0200	Counter Completion Flag read
		82	0000	2000	DM area read
	02	80	0000	09FC	CIO area write
			0B00	0200	Auxiliary area write
		81	0000	0200	TimerPV write
			0800	0200	Counter PV write
		01	0000	0200	Timer Completion Flag write
			0800	0200	Counter Completion Flag write
		82	0000	2000	DM area write

CVM1-CPU01

Command code		Memory area code	Offset	Size	Application
01	01	80	0000	09FC	CIO area read
			0B00	0200	Auxiliary area read
		81	0000	0200	TimerPV read
			0800	0200	Counter PV read
		01	0000	0200	Timer Completion Flag read
			0800	0200	Counter Completion Flag read
		82	0000	2000	DM area read
	02	80	0000	09FC	CIO area write
			0B00	0200	Auxiliary area write
		81	0000	0200	TimerPV write
			0800	0200	Counter PV write
		01	0000	0200	Timer Completion Flag write
			0800	0200	Counter Completion Flag write
		82	0000	2000	DM area write

CVM1-CPU11

Command code		Memory area code	Offset	Size	Application
01	01	80	0000	09FC	CIO area read
			0B00	0200	Auxiliary area read
		81	0000	0400	TimerPV read
			0800	0400	Counter PV read
		01	0000	0400	Timer Completion Flag read
			0800	0400	Counter Completion Flag read
		82	0000	2710	DM area read
	02	80	0000	09FC	CIO area write
			0B00	0200	Auxiliary area write
		81	0000	0400	TimerPV write
			0800	0400	Counter PV write
		01	0000	0400	Timer Completion Flag write
			0800	0400	Counter Completion Flag write
		82	0000	2710	DM area write

CVM1-CPU21

Command code		Memory area code	Offset	Size	Application
01	01	80	0000	09FC	CIO area read
			0B00	0200	Auxiliary area read
		81	0000	0400	TimerPV read
			0800	0400	Counter PV read
		01	0000	0400	Timer Completion Flag read
			0800	0400	Counter Completion Flag read
		82	0000	2710	DM area read
		90 to 97	0000	7FFE	EM bank read for bank 0 to 7
		98	0000	7FFE	EM current bank read
	02	80	0000	09FC	CIO area write
			0B00	0200	Auxiliary area write
		81	0000	0400	TimerPV write
			0800	0400	Counter PV write
		01	0000	0400	Timer Completion Flag write
			0800	0400	Counter Completion Flag write
		82	0000	2710	DM area write
		90 to 97	0000	7FFE	EM bank write for bank 0 to 7
		98	0000	7FFE	EM current bank write

CV1000/CV2000

Command code		Memory area code	Offset	Size	Application
01	01	80	0000	09FC	CIO area read
			0B00	0200	Auxiliary area read
		81	0000	0400	TimerPV read
			0800	0400	Counter PV read
		01	0000	0400	Timer Completion Flag read
			0800	0400	Counter Completion Flag read
		82	0000	2710	DM area read
		90 to 97	0000	7FFE	EM bank read for bank 0 to 7
		98	0000	7FFE	EM current bank read
	02	80	0000	09FC	CIO area write
			0B00	0200	Auxiliary area write
		81	0000	0400	TimerPV write
			0800	0400	Counter PV write
		01	0000	0400	Timer Completion Flag write
			0800	0400	Counter Completion Flag write
		82	0000	2710	DM area write
		90 to 97	0000	7FFE	EM bank write for bank 0 to 7
		98	0000	7FFE	EM current bank write

C20

Command code		Memory area code	Offset	Size	Application
01	01	80	0000	0014	IR/SR area read
			0428	000A	HR area read
		01	0000	0200	Timer/counter Completion Flag read
		81	0000	0200	Timer/counter PV read
	02	80	0000	0014	IR/SR area write
			0428	000A	HR area write
		01	0000	0200	Timer/counter Completion Flag write
		81	0000	0200	Timer/counter PV write

C20H/C28H/C40H/C60H

Command code		Memory area code	Offset	Size	Application
01	01	80	0000	0100	IR/SR area read
			03E8	0040	LR area read
			0428	0064	HR area read
			048C	001C	AR area read
		01	0000	0200	Timer/counter Completion Flag read
		81	0000	0200	Timer/counter PV read
		82	0000	07D0	DM area read
	02	80	0000	0100	IR/SR area write
			03E8	0040	LR area write
			0428	0064	HR area write
			048C	001C	AR area write
		01	0000	0200	Timer/counter Completion Flag write
		81	0000	0200	Timer/counter PV write
		82	0000	07D0	DM area write

C20/28/40/60P

Command code		Memory area code	Offset	Size	Application
01	01	80	0000	0014	IR/SR area read
			0428	000A	HR area read
		01	0000	0030	Timer/counter Completion Flag read
		81	0000	0030	Timer/counter PV read
		82	0000	0040	DM area read
	02	80	0000	0014	IR/SR area write
			0428	000A	HR area write
		01	0000	0030	Timer/counter Completion Flag write
		81	0000	0030	Timer/counter PV write
		82	0000	0040	DM area write

C20/28/40/60PF

Command code		Memory area code	Offset	Size	Application
01	01	80	0000	0020	IR/SR area read
			0428	0010	HR area read
		01	0000	0040	Timer/counter Completion Flag read
		81	0000	0040	Timer/counter PV read
		82	0000	0080	DM area read
	02	80	0000	0020	IR/SR area write
			0428	0010	HR area write
		01	0000	0040	Timer/counter Completion Flag write
		81	0000	0040	Timer/counter PV write
		82	0000	0080	DM area write

C50

Command code		Memory area code	Offset	Size	Application
01	01	80	0000	0040	IR/SR area read
			03E8	0020	LR area read
			0428	0020	HR area read
		01	0000	0080	Timer/counter Completion Flag read
		81	0000	0080	Timer/counter PV read
		82	0000	0200	DM area read
	02	80	0000	0040	IR/SR area write
			03E8	0020	LR area write
			0428	0020	HR area write
		01	0000	0080	Timer/counter Completion Flag write
		81	0000	0080	Timer/counter PV write
		82	0000	0200	DM area write

C120/C120F

Command code		Memory area code	Offset	Size	Application
01	01	80	0000	0040	IR/SR area read
			0428	0020	HR area read
		01	0000	0080	Timer/counter Completion Flag read
		81	0000	0080	Timer/counter PV read
		82	0000	0200	DM area read
	02	80	0000	0040	IR/SR area write
			0428	0020	HR area write
		01	0000	0080	Timer/counter Completion Flag write
		81	0000	0080	Timer/counter PV write
		82	0000	0200	DM area write

C500

Command code		Memory area code	Offset	Size	Application
01	01	80	0000	0100	IR/SR area read
			03E8	0020	LR area read
			0428	0020	HR area read
		01	0000	0080	Timer/counter Completion Flag read
		81	0000	0080	Timer/counter PV read
		82	0000	0200	DM area read
	02	80	0000	0100	IR/SR area write
			03E8	0020	LR area write
			0428	0020	HR area write
		01	0000	0080	Timer/counter Completion Flag write
		81	0000	0080	Timer/counter PV write
		82	0000	0200	DM area write

C500F

Command code		Memory area code	Offset	Size	Application
01	01	80	0000	0100	IR/SR area read
			03E8	0020	LR area read
			0428	0020	HR area read
		01	0000	0080	Timer/counter Completion Flag read
		81	0000	0080	Timer/counter PV read
		82	0000	1000	DM area read
	02	80	0000	0100	IR/SR area write
			03E8	0020	LR area write
			0428	0020	HR area write
		01	0000	0080	Timer/counter Completion Flag write
		81	0000	0080	Timer/counter PV write
		82	0000	1000	DM area write

C1000H

Command code		Memory area code	Offset	Size	Application
01	01	80	0000	0100	IR/SR area read
			03E8	0040	LR area read
			0428	0064	HR area read
			048C	001C	AR area read
		01	0000	0200	Timer/counter Completion Flag read
		81	0000	0200	Timer/counter PV read
		82	0000	1000	DM area read
	02	80	0000	0100	IR/SR area write
			03E8	0040	LR area write
			0428	0064	HR area write
			048C	001C	AR area write
		01	0000	0200	Timer/counter Completion Flag write
		81	0000	0200	Timer/counter PV write
		82	0000	1000	DM area write

C1000HF

Command code		Memory area code	Offset	Size	Application
01	01	80	0000	0100	IR/SR area read
			03E8	0040	LR area read
			0428	0064	HR area read
			048C	001C	AR area read
		01	0000	0200	Timer/counter Completion Flag read
		81	0000	0200	Timer/counter PV read
		82	0000	2710	DM area read
	02	80	0000	0100	IR/SR area write
			03E8	0040	LR area write
			0428	0064	HR area write
			048C	001C	AR area write
		01	0000	0200	Timer/counter Completion Flag write
		81	0000	0200	Timer/counter PV write
		82	0000	2710	DM area write

C2000H

Command code		Memory area code	Offset	Size	Application
01	01	80	0000	0100	IR/SR area read
			03E8	0040	LR area read
			0428	0064	HR area read
			048C	001C	AR area read
		01	0000	0200	Timer/counter Completion Flag read
		81	0000	0200	Timer/counter PV read
		82	0000	1A00	DM area read
	02	80	0000	0100	IR/SR area write
			03E8	0040	LR area write
			0428	0064	HR area write
			048C	001C	AR area write
		01	0000	0200	Timer/counter Completion Flag write
		81	0000	0200	Timer/counter PV write
		82	0000	1A00	DM area write

CS1-CPU67

Command code		Memory area code	Offset	Size	Application
01	01	80	0000	09FC	CIO area read
		B0	0000	1800	
		B2	0000	0200	HR area read
		80	0B00	03C0	Auxiliary area read
		B3	0000	03C0	
		01	0000	0800	Timer/counter Completion Flag read
			0800	0800	
		09	0000	0800	
			8000	0800	
		81	0000	0800	Timer/counter PV read
			0800	0800	
		89	0000	0800	
			8000	0800	
		82	0000	2710	DM area read
		90 to 97	0000	2710	EM bank read for bank 0 to 7
		A0 to A7			
		A8 to AC	0000	2710	EM bank read for bank 8 to C
		98	0000	2710	EM current bank read
	02	80	0000	09FC	CIO area write
		B0	0000	1800	
		B2	0000	0200	HR area write
		80	0B00	03C0	AR area write
		B3	0000	03C0	
		81	0000	0800	Timer/counter PV write
			0800	0800	
		89	0000	0800	
			8000	0800	
		82	0000	2710	DM area write
		90 to 97	0000	2710	EM bank write for bank 0 to 7
		A0 to A7			
		A8 to AC	0000	2710	EM bank write for bank 8 to C
		98	0000	2710	EM current bank write

CS1-CPU66

Command code		Memory area code	Offset	Size	Application
01	01	80	0000	09FC	CIO area read
		B0	0000	1800	
		B2	0000	0200	HR area read
		80	0B00	03C0	Auxiliary area read
		B3	0000	03C0	
		01	0000	0800	Timer/counter Completion Flag read
			0800	0800	
		09	0000	0800	
			8000	0800	
		81	0000	0800	Timer/counter PV read
			0800	0800	
		89	0000	0800	
			8000	0800	
		82	0000	2710	DM area read
		90 to 96	0000	2710	EM bank read for bank 0 to 6
		A0 to A6			
		98	0000	2710	EM current bank read
	02	80	0000	09FC	CIO area write
		B0	0000	1800	
		B2	0000	0200	HR area write
		80	0B00	03C0	AR area write
		B3	0000	03C0	
		81	0000	0800	Timer/counter PV write
			0800	0800	
		89	0000	0800	
			8000	0800	
		82	0000	2710	DM area write
		90 to 96	0000	2710	EM bank write for bank 0 to 6
		A0 to A6			
		98	0000	2710	EM current bank write

CS1-CPU65/45

Command code		Memory area code	Offset	Size	Application
01	01	80	0000	09FC	CIO area read
		B0	0000	1800	
		B2	0000	0200	HR area read
		80	0B00	03C0	Auxiliary area read
		B3	0000	03C0	
		01	0000	0800	Timer/counter Completion Flag read
			0800	0800	
		09	0000	0800	
			8000	0800	
		81	0000	0800	Timer/counter PV read
			0800	0800	
		89	0000	0800	
			8000	0800	
		82	0000	2710	DM area read
		90 to 92	0000	2710	EM bank read for bank 0 to 2
		A0 to A6			
		98	0000	2710	EM current bank read
	02	80	0000	09FC	CIO area write
		B0	0000	1800	
		B2	0000	0200	HR area write
		80	0B00	03C0	AR area write
		B3	0000	03C0	
		81	0000	0800	Timer/counter PV write
			0800	0800	
		89	0000	0800	
			8000	0800	
		82	0000	2710	DM area write
		90 to 92	0000	2710	EM bank write for bank 0 to 2
		A0 to A2			
		98	0000	2710	EM current bank write

CS1-CPU64/44

Command code		Memory area code	Offset	Size	Application
01	01	80	0000	09FC	CIO area read
		B0	0000	1800	
		B2	0000	0200	HR area read
		80	0B00	03C0	Auxiliary area read
		B3	0000	03C0	
		01	0000	0800	Timer/counter Completion Flag read
			0800	0800	
		09	0000	0800	
			8000	0800	
		81	0000	0800	Timer/counter PV read
			0800	0800	
		89	0000	0800	
			8000	0800	
		82	0000	2710	DM area read
		90	000	2710	EM bank 0 read
		A0			
		98	0000	2710	EM current bank read
	02	80	0000	09FC	CIO area write
		B0	0000	1800	
		B2	0000	0200	HR area write
		80	0B00	03C0	AR area write
		B3	0000	03C0	
		81	0000	0800	Timer/counter PV write
			0800	0800	
		89	0000	0800	
			8000	0800	
		82	0000	2710	DM area write
		90	000	2710	EM bank 0 write
		A0			
		98	0000	2710	EM current bank write

CS1-CPU63/43/42

Command code		Memory area code	Offset	Size	Application
01	01	80	0000	09FC	CIO area read
		B0	0000	1800	
		B2	0000	0200	HR area read
		80	0B00	03C0	Auxiliary area read
		B3	0000	03C0	
		01	0000	0800	Timer/counter Completion Flag read
			0800	0800	
		09	0000	0800	
			8000	0800	
		81	0000	0800	Timer/counter PV read
			0800	0800	
		89	0000	0800	
			8000	0800	
		82	0000	2710	DM area read
	02	80	0000	09FC	CIO area write
		B0	0000	1800	
		B2	0000	0200	HR area write
		80	0B00	03C0	AR area write
		B3	0000	03C0	
		81	0000	0800	Timer/counter PV write
			0800	0800	
		89	0000	0800	
			8000	0800	
		82	0000	2710	DM area write

5-4-5 RUN: 04 01

Changes the CPU Unit's operating mode to DEBUG, MONITOR or RUN, starting execution of the program in the PLC.

Command Format

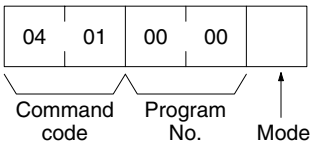

Response Format

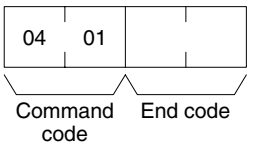

Parameters

Program No. and Mode (command)
Refer to the *FINS Commands Reference Manual* (W227) for details on the program number and mode.

End code (response)
Refer to *5-8 End Codes* for information on end codes.

5-4-6 STOP: 04 02

Changes the CPU Unit's operating mode to PROGRAM, stopping program execution.

Command Format

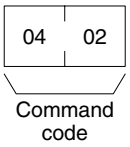

Response Format

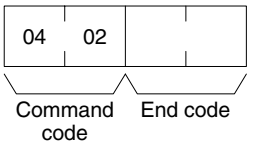

Parameters

End code (response)
Refer to *5-8 End Codes* for information on end codes.

5-4-7 CONTROLLER DATA READ: 05 01

Reads the model of the PLC.

Command Format

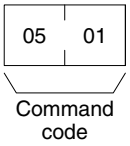

Response Format

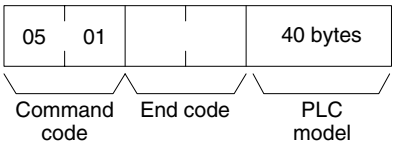

Parameters

PLC model (response)

The model is returned in not more than 40 bytes in ASCII (i.e., 40 ASCII characters). If the model or version requires less than 40 characters, spaces will be inserted to fill the remainder.

The following stings will be returned.
C250
C500
C120/C50
C250F
C500F
C120F
C2000
C1000H
C2000H/CQM1/CPM1/CPM1A/SRM1
C20H/C28H/C40H/C200H/C200HS/C200HX/HG/HE
C1000HF
CV500
CV1000
CV2000
CS1
CVM1-CPU01
CVM1-CPU11
CVM1-CPU21
SYSMAC WAY PLC-

The last string will be returned for all PLCs not listed above.

End code (response)

Refer to *5-8 End Codes* for information on end codes.

5-4-8 CONTROLLER STATUS READ: 06 01

Reads the operating status of the controller.

Command Format

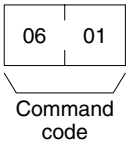

Response Format

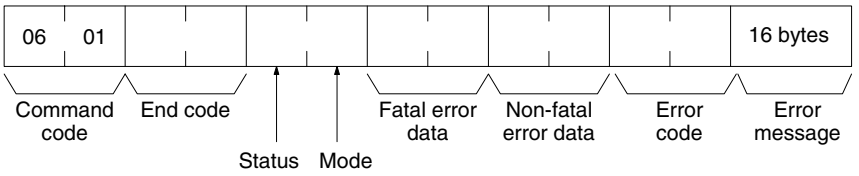

Parameters

Refer to the *FINS Commands Reference Manual* (W227) for details on parameters.

Fatal error data (response)

Only the following fatal error data is supported.

FALS error
Program error (no END instruction)
I/O bus error
JMP error
Memory error
I/O setting error
I/O point overflow

Non-fatal error data (response)

Only the following non-fatal error data is supoorted.

FAL error
Battery error
Cycle time over
I/O verification error

End code (response)

Refer to *5-8 End Codes* for information on end codes.

5-4-9 LOOPBACK TEST: 08 01

Executes a loopback test with the specified node (i.e., the CPU Unit or Host Link Unit).

Command Format

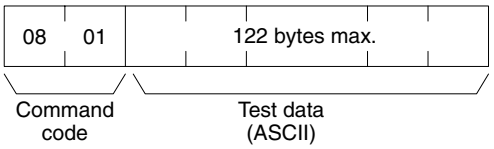

Response Format

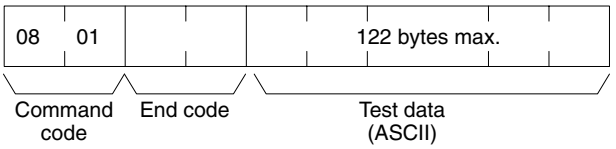

Parameters

Test data (command and response)
In the command block, designate the data to be transmitted to a specified node. Up to 122 bytes of data can be designated. In the response block, the test data from the command block will be returned as it is. If the test data in the response block is different from that in the command block, an error has occurred.

An error will occur if the test data is not ASCII.

End code (response)
Refer to *5-8 End Codes* for information on end codes.

5-4-10 FILE MEMORY INDEX READ: 22 0F

Reads the File Memory index for the specified number of blocks from the specified beginning block number. This command is valid for the C1000H, C1000HF, and C2000H only.

Command Block

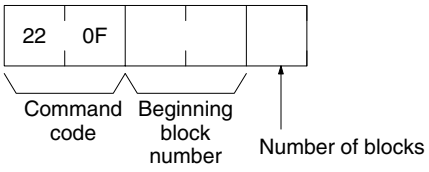

Response Block

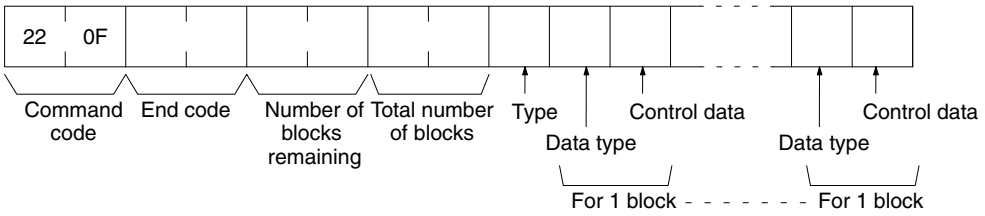

Parameters

Refer to the *FINS Commands Reference Manual* (W227) for details on parameters.

Beginning block number (command)
The first block can be 0000 to 07CF (0 to 1999 decimal);

Number of blocks (command)
The number of blocks can be 01 to 80 (1 to 128 decimal).

Number of blocks remaining (response)
The number of blocks not to be read can be 0000 to 07D0 (0 to 2,000 decimal).

Total number of blocks (response)
The total number of blocks in File Memory can be 0000, 03E8, or 07D0 (0, 1,000, or 2,000 in decimal, respectively).

End code (response)
Refer to *5-8 End Codes* for information on end codes.

5-4-11 FILE MEMORY READ: 22 10

Reads the contents of the specified File Memory block. This command is valid for the C1000H, C1000HF, and C2000H only.

Command Block

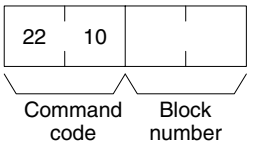

Response Block

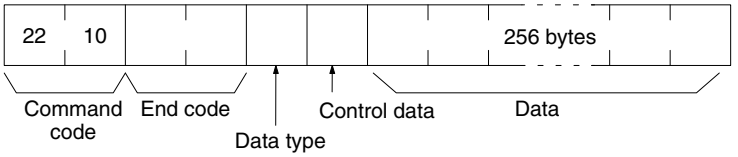

Parameters

Refer to the *FINS Commands Reference Manual* (W227) for details on parameters.

Block number (command)

The File Memory block to read can be between 0000 and 07CF (0 and 1,999 decimal).

End code (response)

Refer to *5-8 End Codes* for information on end codes.

5-4-12 FILE MEMORY WRITE:22 11

Writes the specified contents to the specified File Memory block. This command is valid for the C1000H, C1000HF, and C2000H only.

Command Block

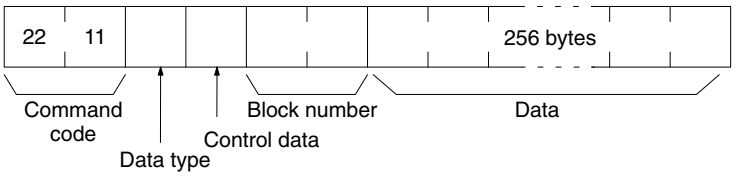

Response Block

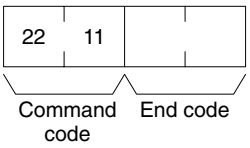

Parameters

Refer to the *FINS Commands Reference Manual* (W227) for details on parameters.

Block number (command)

The File Memory block to write can be between 0000 and 07CF (0 and 1,999 decimal).

Data (command

Specify the contents for the specified File Memory block (256 bytes (128 words).

End code (response)

Refer to *5-8 End Codes* for information on end codes.

5-4-13 FORCED SET/RESET: 23 01

Force-sets (ON) or force-resets (OFF) bits/flags. Bits/flags that are forced ON or OFF will remain ON or OFF and cannot be written to until the forced status is released.

Command Format

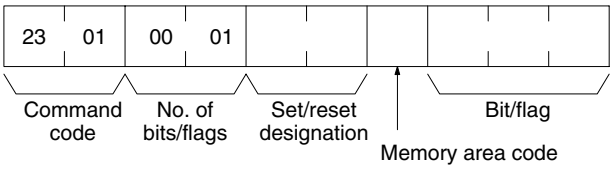

Response Format

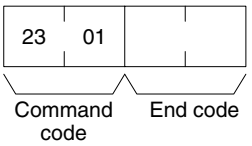

Parameters

Refer to the *FINS Commands Reference Manual* (W227) for details on parameters.

Number of bits/flags (command)
The number of bits/flags to be set/reset is always 0001.

Set/reset designation (command)
Specify the action to be taken for the bit/flag.

Value (hex)	Name	Operation
0000	Forced reset	Turns OFF (0) the bit/flag and places it in forced status.
0001	Forced set	Turns ON (1) the bit/flag and places it in forced status.

End code (response)
Refer to *5-8 End Codes* for information on end codes.

5-4-14 FORCED SET/RESET CANCEL: 23 02

Cancels all bits (flags) that have been forced ON or forced OFF.

Command Format

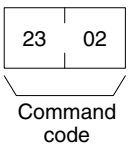

Response Format

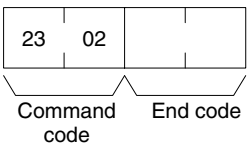

Parameters

End code (response)
Refer to *5-8 End Codes* for information on end codes.

5-4-15 FINS Commands for the CV-series Host Link Protocol

Refer to the *FINS Commands Reference Manual* (W227) for details on FINS commands for the CV-series Host Link protocol.

5-4-16 FINS Commands for the CompoWay/F Protocol

The commands that can be used depend on the CompoWay/F component. Refer to the operation manuals for the components.

Conversion between FINS and CompoWay/F

Normal Conversion

The Open Network Controller converts all FINS commands to text to create CompoWay/F frames. The responses from CompoWay/F devices are then converted to FINS responses. An example is shown below.

FINS command: 0x0101800000000001
CompoWay/F: 0x3031303138303030303030303030303031
("0101800000000001" in ASCII)
Here, only the FINS-mini command text portion is shown.

The conversion methods for LOOPBACK TEST (08 01) and TEXT STRING WRITE (41 02), however, are different.

LOOPBACK TEST (08 01) Conversion

Only the command code (08 01) is converted to ASCII and the rest of the data is placed in the CompoWay/F frame without conversion (i.e., as binary data).

FINS command: 0x08011234567890
CompoWay/F: 0x303830311234567890
("0801" in ASCII followed by 1234567890)
Here, only the FINS-mini command text portion is shown.

TEXT STRING WRITE (41 02) Conversion

Only the command code (41 02), beginning write address (2 bytes), and the number of elements (2 bytes) are converted to ASCII and the rest of the data is placed in the CompoWay/F frame without conversion (i.e., as binary data).

FINS command: 0x4102000000011234567890
CompoWay/F: 0x343130323030303030303030311234567890
("410200000001" in ASCII followed by 1234567890)
Here, only the FINS-mini command text portion is shown.

5-5 FINS Commands Addressed to DRM_UNIT

This section describes the FINS commands that can be addressed to DRM_UNIT. These commands are listed in the following table.

Command code	Name
04 01	RUN
04 02	STOP
04 03	RESET
05 01	CONTROLLER DATA READ
08 01	LOOPBACK TEST
28 01	EXPLICIT MESSAGE SEND

Note If a command that is not supported is received by DRM_UNIT, it will return an error response with an end code of 04 01. If a timeout occurs when sending a FINS message to another node, an error response with an end code of 02 05 will be returned. If the destination is not registered in the scan list, an error response with an end code of 01 03 will be returned.

5-5-1 RUN: 04 01

Starts the scan and enables sending explicit messages.

Command Format

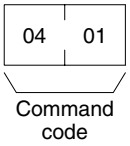

Response Format

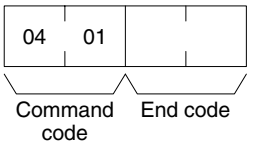

Precautions

A response will be returned when starting the scan is requested from the DeviceNet processor. Access the status data in the event memory to confirm whether or not the scan has actually started.

End code (response)

Refer to *5-8 End Codes* for information on end codes.

5-5-2 STOP: 04 02

Stops the scan and disables sending explicit messages.

Command Format

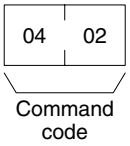

Response Format

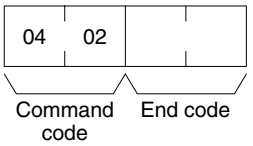

Precautions

A response will be returned when stopping the scan is requested from the DeviceNet processor. Access the status data in the event memory to confirm whether or not the scan has actually stopped.

End code (response)

Refer to *5-8 End Codes* for information on end codes.

5-5-3 RESET: 04 03

Resets DeviceNet hardware.

Command Format

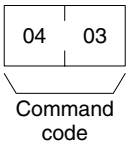

Response Format

No response.

Precautions

No response will be returned when the command is executed normally.

5-5-4 CONTROLLER DATA READ: 05 01

Reads the following information.

- Model
- Version

Command Format

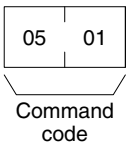

Response Format

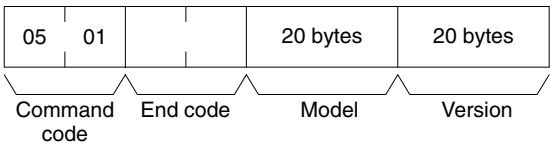

Parameters

Model and Version (response)
The model will always be returned as follows: "DRM_UNIT/QNX-□□□□□□□□."
The version will always be returned as follows:
"V2.50□□□□□□□□□□□□□□□."
(□ = space)

End code (response)
Refer to *5-8 End Codes* for information on end codes.

5-5-5 LOOPBACK TEST: 08 01

Executes a loopback test with DRM_UNIT.

Command Format

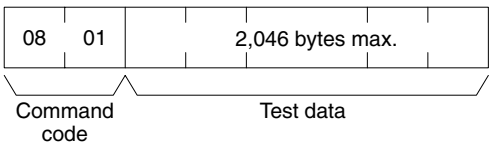

Response Format

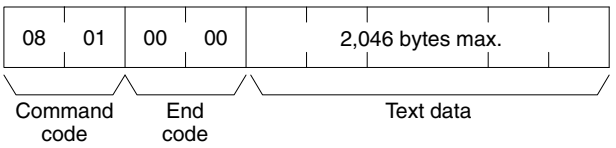

Parameters

Test data (command and response)
In the command block, designate the data to be transmitted to DRM_UNIT. In the response block, the test data from the command block will be returned as it is. If the test data in the response block is different from that in the command block, an error has occurred.

End code (response)
Refer to *5-8 End Codes* for information on end codes.

5-5-6 EXPLICIT MESSAGE SEND: 28 01

Sends an explicit DeviceNet message to the specified node. Refer to the *CompoBus/D (DeviceNet)Operation Manual* (W267) for information on explicit messages.

Command Format

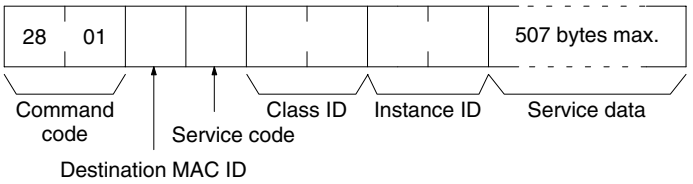

Response Format

Normal Response

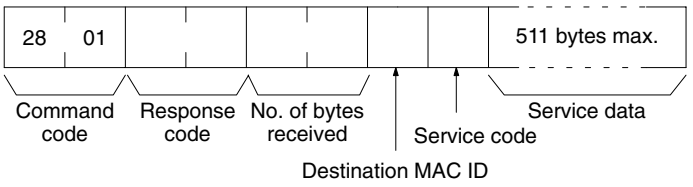

Error Responses

The following response is returned if an error occurs for the explicit message.

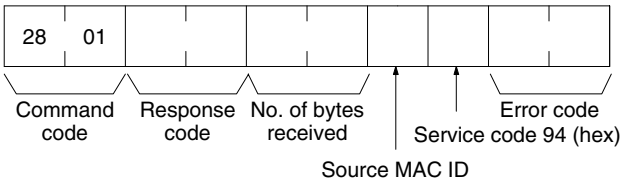

The following response is returned if the explicit message cannot be sent or times out.

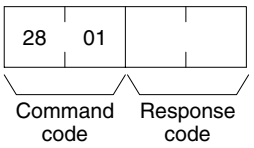

5-6 FINS Commands Addressed to CLK_UNIT

The following FINS commands can be addressed to CLK_UNIT.

Refer to the *Controller Link Support Board Operation Manual* (W307) for information on these FINS commands.

Command code		Data links		Name
		Active	Stopped	
04	01	No	OK	RUN
	02	OK	No	STOP
05	01	OK	OK	CONTROLLER DATA READ
06	01	OK	OK	CONTROLLER STATUS READ
	02	OK	OK	NETWORK STATUS READ
	03	OK	OK	DATA LINK STATUS READ
08	01	OK	OK	LOOPBACK TEST
	02	OK	OK	BROADCAST TEST RESULTS READ
	03	OK	OK	BROADCAST TEST DATA SEND
21	02	OK	OK	ERROR LOG READ
	03	OK	OK	ERROR LOG CLEAR

5-7 FINS Commands Addressed to SYSMAC_UNIT

This section describes the FINS commands that can be addressed to SYSMAC_UNIT.

The FINS commands supported by SYSMAC_UNIT and the SYSMAC Board are not the same, as shown in the following tables.

FINS Commands Addressed to SYSMAC Board

The following FINS commands can be addressed to the SYSMAC Board.

Command code		Name
01	01	MEMORY AREA READ
	02	MEMORY AREA WRITE
04	01	RUN
	02	STOP
05	01	CONTROLLER DATA READ
06	01	CONTROLLER STATUS READ
07	01	CLOCK READ
	02	CLOCK WRITE

FINS Commands Addressed to SYSMAC_UNIT

The following FINS commands can be addressed to SYSMAC_UNIT.

Command code		Name
05	01	CONTROLLER DATA READ

5-7-1 Memory Area Designations

The following table gives the addresses to use when reading or writing memory area data. The *Data area address* column gives the normal addresses used in the PC program. The *Address used in FINS* column gives the addresses used in FINS commands and responses. These addresses are combined with the memory area codes to specify memory locations.

The *No. of bytes* column specifies the number of bytes of data to read or write for that area.

Area	Data type	Data area address		Address used in FINS		Memory area code	No. of bytes
		Word	Bit	Bytes 1 and 2	Byte 3		
CIO area	Word contents	CIO 000 to CIO 255	00	0000 to 00FF	00	80	2
Expansion CIO area	Word contents		00	0100 to 01FF	00	80	2
LR area	Word contents	LR 00 to LR 63	00	03E8 to 0427	00	80	2
HR area	Word contents	HR 00 to HR 99	00	0428 to 048B	00	80	2
AR area	Word contents	AR 00 to AR 27	00	048C to 04A7	00	80	2
TIM/CNT area	Completion Flag status	TIM/CNT 000 to TIM/CNT 511	00	0000 to 01FF	00	01	1
	PV	TIM/CNT 000 to TIM/CNT 511	00	0000 to 01FF	00	81	2
DM area	Word contents	DM 0000 to DM 9999	00	0000 to 270F	00	82	2
EM area	Word contents	EM 0000 to EM 6143	00	0000 to 17FF	00	90/98	2

Each address consists of three bytes, as shown below.

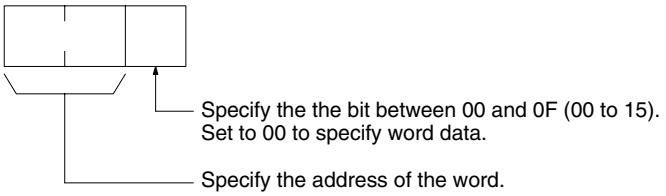

Memory area code 90 can be used to specify bank 0 of the EM area or memory area code 98 can be used to specify the current bank.

The DM area can normally be accessed from DM 0000 to DM 6655. If expanded DM area is set, DM 7000 to DM 9999 can also be accessed. Accessing DM 6656 to DM 6999 will cause an error to be returned in the FINS response.

5-7-2 MEMORY AREA READ: 01 01

Reads the contents of the specified number of consecutive memory area words starting from the specified word.

Command Format

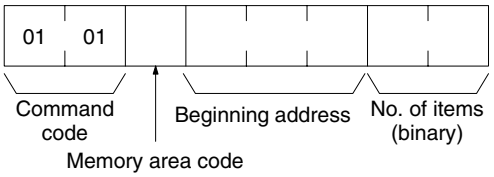

Response Format

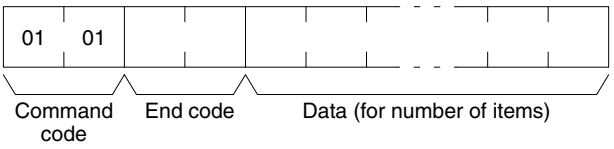

Parameters

Memory area code, beginning address, number of items (command)
Specify the type of data to be read, the beginning address of the data to be read, and the number of items of data to be read (2 digits hexadecimal). The number of items must be between 0000 and 0080 Hex (0 to 128 decimal)

The memory area addresses that can be read are given in the following table.

Area	Data type	Address used in FINS		Memory area code	No. of bytes
		Bytes 1 and 2	Byte 3		
CIO area	Word contents	0000 to 00FF	00	80	2
Expansion CIO area	Word contents	0100 to 01FF	00	80	2
LR area	Word contents	03E8 to 0427	00	80	2
HR area	Word contents	0428 to 048B	00	80	2
AR area	Word contents	048C to 04A7	00	80	2
TIM/CNT area	Completion Flag status	0000 to 01FF	00	01	1
	PV	0000 to 01FF	00	81	2
DM area	Word contents	0000 to 270F	00	82	2
EM area	Word contents	0000 to 17FF	00	90/98	2

Data (response)
The data from the specified memory area is returned in sequence starting from the beginning address. The required number of bytes in total is calculated as follows:

Number of bytes required by each item x number of items

Precautions

You cannot read data in both the CIO and Expansion CIO areas or in both the DM and Expanded DM areas in the same command. An error response will be returned.

Accessing DM 6656 to DM 6999 will cause an error to be returned in the FINS response. These words are reserved by the system.

End code (response)
Refer to *5-8 End Codes* for information on end codes.

5-7-3 MEMORY AREA WRITE: 01 02

Writes data to the specified number of consecutive words starting from the specified word.

Command Format

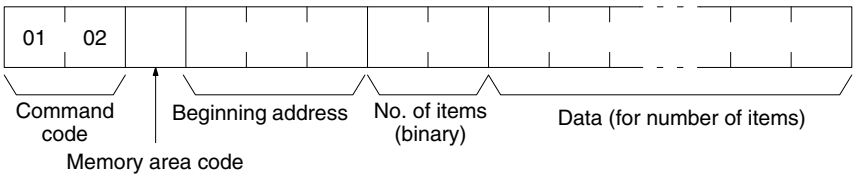

Response Format

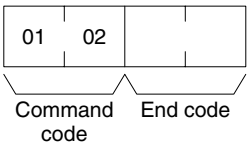

Parameters

Memory area code, beginning address, number of items (command)
Specify the type of data to be written, the beginning address of the data to be written, and the number of items of data to be written (2 digits hexadecimal). The number of items must be between 0000 and 0080 Hex (0 to 128 decimal)

The memory area addresses that can be read are given in the following table.

Area	Data type	Address used in FINS		Memory area code	No. of bytes
		Bytes 1 and 2	Byte 3		
CIO area	Word contents	0000 to 00FF	00	80	2
Expansion CIO area	Word contents	0100 to 01FF	00	80	2
LR area	Word contents	03E8 to 0427	00	80	2
HR area	Word contents	0428 to 048B	00	80	2
AR area	Word contents	048C to 04A7	00	80	2
TIM/CNT area	PV	0000 to 01FF	00	81	2
DM area	Word contents	0000 to 270F	00	82	2
EM area	Word contents	0000 to 17FF	00	90/98	2

Data (response)
The data to be written to the specified memory area in sequence starting from the beginning address. The required number of bytes in total is calculated as follows:

Number of bytes required by each item x number of items

Precautions

You cannot write data to both the CIO and Expansion CIO areas or to both the DM and Expanded DM areas in the same command. An error response will be returned.

Accessing DM 6656 to DM 6999 will cause an error to be returned in the FINS response. These words are reserved by the system.

End code (response)
Refer to *5-8 End Codes* for information on end codes.

5-7-4 RUN: 04 01

Changes the operating mode to MONITOR or RUN.

Command Format

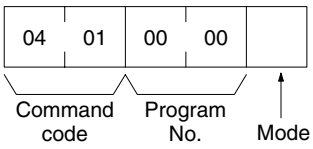

Response Format

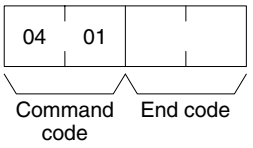

Parameters

Program number (command)
Always 0000 (hex).

Mode (command)
Set the operating mode as follows:

02 (hex): Change to MONITOR mode.

04 (hex): Change to RUN mode.

End code (response)
Refer to *5-8 End Codes* for information on end codes.

Precautions

If the Mode or the Mode and the Program Number are omitted, the operating mode will be changed to MONITOR.

5-7-5 STOP: 04 02

Changes the operating mode to PROGRAM.

Command Format

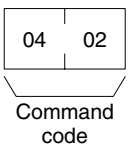

Response Format

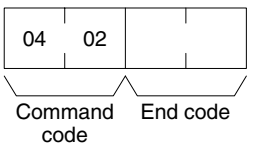

Parameters

End code (response)
Refer to *5-8 End Codes* for information on end codes.

5-7-6 CONTROLLER DATA READ: 05 01

Reads the following data:

- CPU Unit model and version
- Area data and CPU Unit information

Command Format

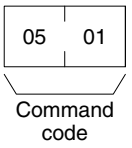

Response Format

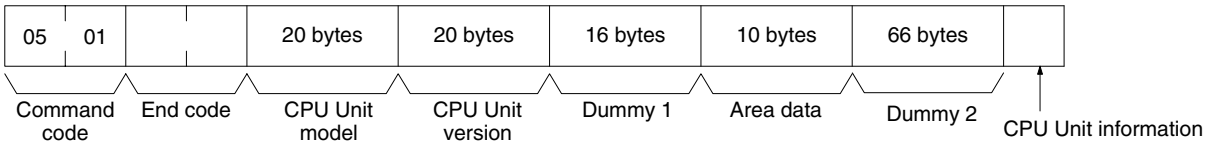

Parameters

CPU Unit model and version (response)
Each is returned in not more than 20 bytes in ASCII (i.e., 20 ASCII characters). If the model or version requires less than 20 characters, spaces will be inserted to fill the remainder.

Dummy 1 and Dummy 2 (response)
All zeros will be returned.

Area data (response)
All bytes will be 00. The area data is configured as follows:

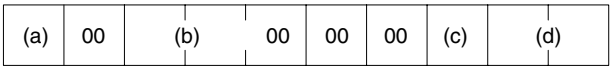

Item		Meaning	Unit
(a)	Program area size	The size of PC Setup and program area	Kwords
(b)	Number of DM words	Total words in the DM area	Words
(c)	File memory status	00: No file memory 01: SRAM 04: First half RAM, second half ROM	---
(d)	File memory size	Total number of blocks in file memory 0000: No file memory 0001: 1,000 blocks 0002: 2,000 blocks	---

Note One word = two bytes.

CPU Unit information (response)
If a Programming Console is connected, 80 will be returned. If not, 00 will be returned. For the SYSMAC Board, 00 will always be returned.

End code (response)
Refer to *5-8 End Codes* for information on end codes.

5-7-7 CONTROLLER STATUS READ: 06 01

Reads the operating status of the controller.

Command Format

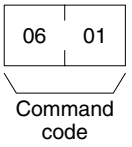

Response Format

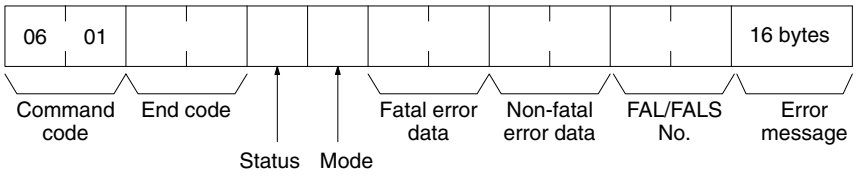

Parameters

Status (response)
The operating status of the CPU Unit is returned as follows:

00: Stop (user program not being executed)

01: Run (user program being executed)

80: CPU on standby (e.g., start switch is OFF or waiting for remote devices to turn ON).

Mode (response)
The CPU Unit operating mode is as follows:

00: PROGRAM

02: MONITOR

04: RUN

Fatal error data (response)
Fatal error data for the CPU Unit is configured as follows:

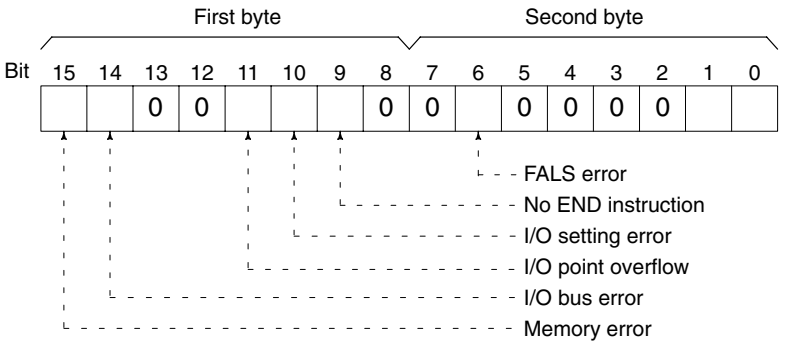

Non-fatal error data (response)

Non-fatal error data for the CPU Unit is configured as follows:

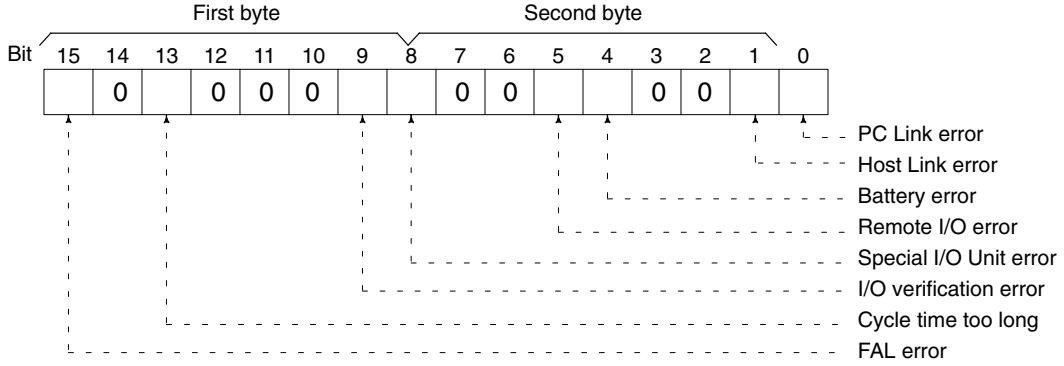

FAL/FALS No.(response)

The number of the error at the time the command is executed will be returned. The FAL/FALS number will be returned as 2 digits of BCD data in the second byte. The first byte will contain 00. The FAL/FALS number will be between 0 and 99 decimal.

Error message (response)

Indicates messages from execution of FAL or FALS instruction in 16 bytes of ASCII (i.e., 16 ASCII characters). If there is no error message, nothing will be returned.

End code (response)

Refer to *5-8 End Codes* for information on end codes.

5-7-8 CLOCK READ: 07 01

Reads clock information.

Command Format

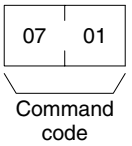

Response Format

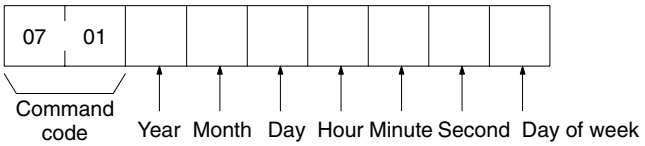

Parameters

Year, month, day, hour, minute, second, day of week (response)

The year, month, day of month, hour, minute, and second are expressed in BCD.

Year: The rightmost two digits of the year.

Hour: 00 to 23 (BCD).

Day of week: As follows:

Value (Hex)	00	01	02	03	04	05	06
Day of week	Sun	Mon	Tues	Wed	Thur	Fri	Sat

End code (response)

Refer to *5-8 End Codes* for information on end codes.

5-7-9 CLOCK WRITE: 07 02

Writes clock information.

Command Format

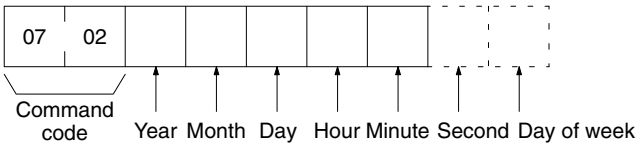

Response Format

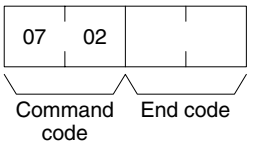

Parameters

Year, month, day, hour, minute, second, day of week (command)
The year, month, day of month, hour, minute, and second are expressed in BCD. The second data may be omitted. The day of week data may also be omitted will not be used even if specified (see below.)

Year: The rightmost two digits of the year.

Hour: 00 to 23 (BCD).

Day of week: The day of the week will be calculated from the year, month, and day. The value in the command will be ignored.

Value (Hex)	00	01	02	03	04	05	06
Day of week	Sun	Mon	Tues	Wed	Thur	Fri	Sat

End code (response)
Refer to *5-8 End Codes* for information on end codes.

5-7-10 CONTROLLER DATA READ: 05 01

Reads the following data from the SYSMAC_UNIT running on the Open Network Controller.

- Model
- Version

Command Format

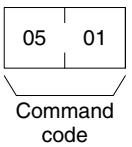

Response Format

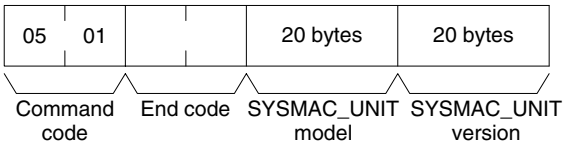

Parameters

SYSMAC_UNIT model and version (response)
Each is returned in not more than 20 bytes in ASCII (i.e. 20 ASCII characters). If the model or version requires less than 20 characters, spaces will be inserted to fill the remainder.

5-8 End Codes

End codes (also called response codes) are two-bytes codes returned in responses to FINS commands to indicate the results of command executed. The end codes are structured as follows:

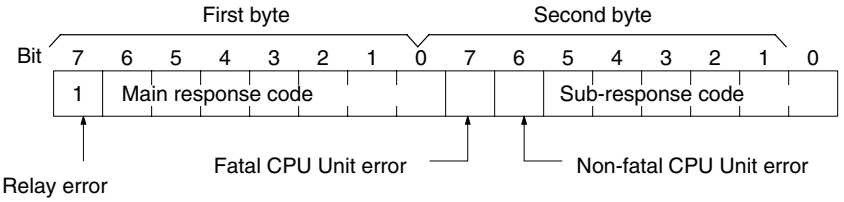

The main response codes classifies the type of error and the sub-response code provides details on specific errors.

Bit 7 of the first byte will be ON if an error occurred in relaying between networks. In this case too, the contents of the second byte will provide details on the specific error that occurred. Further information on relay error can be found in the *FINS Commands Reference Manual* (W227).

Bit 6 or bit 7 of the second byte will be ON if a non-fatal or fatal error has occurred in the CPU Unit or host computer at the destination. Refer to documentation for the host computer or PLC at the destination and remove the error.

Depending on the command, the destination code will sometimes make a request of another node on a network. The other node is referred to as the third node.

The following table lists the main response codes and the sub-response codes returned for a FINS command. The probable cause and corrections for each error code are also given.

Main code	Subcode	Check point	Probable cause	Correction
00: Normal completion	00: Normal completion	---	---	---
	01: Service canceled	---	Service was cancelled.	Check the capacity of the destination area in the third node.
		Data link status	Service was cancelled.	Check the status of the data link.
01: Local node error	01: Local node not in network	Network status of local node	Local node is not participating in the network.	Connect the node to the network.
	02: Token timeout	Maximum node address	Token doesn't arrive.	Set the local node to within the maximum node address.
	03: Retries failed	---	Send was not possible during the specified number of retries.	Execute a communications test between the nodes and re-examine the system environment if it fails.
	04: Too many send frames	Number of enabled send frames	Cannot send because maximum number of event frames exceeded.	Check event execution on the network and reduce the number of events per cycle. Increase the maximum number of event frames.
	05: Node address range error	Node address	Node address setting error occurred.	Check the settings of the rotary switches to be sure that the address is within range and that each address is set only once in the same network.
	06: Node address duplication	Node addresses	The same node address has been set twice in the same network.	Change the address of one of the nodes with the same address.
02: Destination node error	01: Destination node not in network	INS indicator on Unit	The destination node is not in the network.	Add the destination node to the network.
	02: Unit missing	Instruction control data	There is no Unit with the specified unit address.	Check the destination unit address.
	03: Third node missing	Instruction control data	The third node does not exist.	Check the unit address of the third node. Check the node address of the third node in the send data for CMND(490).
		Command data	Broadcasting was specified.	Specify only one node for the third node.
	04: Destination node busy	---	The destination node is busy.	Increase the number of retries or review the system so that the destination node does not receive so many messages.
	05: Response timeout	---	The destination node does not exist.	Check the settings for the destination node.
			The message was destroyed by noise.	Increase the number of retries or test communications between nodes to see if there is too much noise.
		Instruction control data	The response monitor time is too short.	Increase the length of the response monitor time.
		Error history	The send/receive frame was discarded.	Take appropriate measures based on the error history.

Main code	Subcode	Check point	Probable cause	Correction
03: Controller error	01: Communications controller error	Unit/Board indicators	An error occurred in the communications controller.	Take appropriate measures based on the operation manuals for the related Units/Boards.
	02: CPU Unit error	CPU Unit indicators at destination node	A CPU error occurred in the destination CPU Unit.	Clear the error from the CPU Unit based on its operation manuals.
	03: Controller error	Board indicators	A response was not returned because an error occurred in the Board.	Check network communications status and restart the Board. If the problem persists, replace the Board.
	04: Unit number error	Unit number	The unit number was set incorrectly.	Set the rotary switches correctly, being sure the unit numbers are within range and that each number is used only once.
04: Service unsupported	01: Undefined command	Command code	The Unit/Board does not support the specified command code.	Check the command code.
	02: Not supported by model/version	Unit model and version	The command cannot be executed because the model or version is incorrect.	Check the model number and version.
05: Routing table error	01: Destination address setting error	Routing table	The destination network or node address is not set in the routing tables.	Register the destination network and node in the routing tables.
	02: No routing tables	Routing table	Relaying is not possible because there are no routing tables.	Set routing tables in the source node, designation node, and relay nodes.
	03: Routing table error	Routing table	There is an error in the routing tables.	Set the routing tables correctly.
	04: Too many relays	Network configuration	An attempt was made to send to a network that was over 3 networks away.	Reconstruct the networks or change the routing tables so that commands are sent within a range of 3 networks or less.
10: Command format error	01: Command too long	Command data	The command is longer than the maximum permissible length.	Check the command format and correct the command data.
	02: Command too short	Command data	The command is shorter than the minimum permissible length.	Check the command format and correct the command data.
	03: Elements/ data don't match	Command data	The designated number of elements differs from the number of write data items.	Check the number of elements and set data for each element.
	04: Command format error	Command data	An incorrect format was used.	Check the command format and correct the command data.
	05: Header error	Routing table	Either the relay table in the local node or the local network table in the relay node is incorrect.	Set the routing tables correctly.

Main code	Subcode	Check point	Probable cause	Correction
11: Parameter error	01: Area classification missing	Memory area code in command data	The specified word does not exist in the memory area or there is no EM Area.	Check the memory areas and parameter codes in the command and correct the command data.
	02: Access size error	Access size specification in command data	The access size specification is incorrect or an odd word address is specified.	Check the memory areas and access size and correct the access size.
	03: Address range error	Starting address in command data	The start address in command process is beyond the accessible area.	Check the area being processed and set the correct range.
	04: Address range exceeded	Starting address and number of elements in command data	The end address in command process is beyond the accessible area.	Check the area being processed and set the correct range.
		Data link tables	The total number of words is beyond the limit.	Correct the data link tables.
		Outside of time compensation range	Exceeds permissible range of time compensation.	Set a time within the permissible range of time compensation.
	06: Program missing	Program number in command data	A non-existent program has been specified.	Check the program numbers and specify a valid one.
	09: Relational error	Command data	A large-small relationship in the elements in the command data is incorrect.	Check the command data and correct the relationship between the elements.
		Data link table	A node not set in the common link parameters is set as a refresh parameter.	Correct the data link tables.
	0A: Duplicate data access	I/O access in CPU Unit	Differential monitoring was specified during data tracing or data tracing was specified during differential monitoring.	Abort the current process or wait until it ends before executing the command.
		Data link tables	The same node address is specified more than once.	Correct the data link tables.
	0B: Response too long	Number of elements in command data	The response format is longer than the maximum permissible length.	Check the command format and correct the number of elements.
	0C: Parameter error	Parameters in command data	There is an error in one of the parameter settings.	Check the command data and correct the parameters.
		Data link table file	There is an error in the file.	Check the contents of the file.

Main code	Subcode	Check point	Probable cause	Correction
20: Read not possible	02: Protected	---	The program area is protected.	Release protection from a Programming Device and then execute the command.
	03: Table missing	Table	A table has not been registered.	Register a table.
			There is an error in the table.	Correct the table.
	04: Data missing	---	The search data does not exist.	---
	05: Program missing	Program number in command data	A non-existing program number has been specified.	Check the program numbers and specify a valid one.
	06: File missing	File name and file device	The file does not exist at the specified file device.	Check the path and file name, and correct them.
	07: Data mismatch	Contents of memory being compared	A data being compared is not the same.	Check memory contents and use the correct data.
		---	A file read operation failed.	Check the contents of the file.
21: Write not possible	01: Read-only	---	The specified area is read-only.	If the area is protected using a switch setting, release protection and then execute the command. If the area is permanently read-only, the command cannot be executed.
	02: Protected	---	The program area is protected.	Release protection from a Programming Device and then execute the command.
	Cannot write data link table	PC Setup	Writing is not possible because automatic data link table generation has been specified.	Change the PC Setup so that the data link tables can be manually written.
	03: Cannot register	Number of files in file device	The file cannot be created because the limit has been exceeded.	Delete any unnecessary files or create more file memory.
		Number of files open	The maximum number of files has already been opened for the system limit.	Close one or more files and then execute the command.
	05: Program missing	Program number in command data	A non-existent program number has been specified.	Check the program numbers and specify a valid one.
	06: File missing	File name	The file does not exist at the specified file device.	Correct the file name and then execute the command.
	07: File name already exists	File name	A file with the same name already exists in the specified file device.	Change the name of the file being written and then execute the command.
	08: Cannot change	Contents of memory being changed	The change cannot be made because doing so would create a problem.	---

Main code	Subcode	Check point	Probable cause	Correction
22: Not executable in current mode	01: Not possible during execution	---	The mode is incorrect.	Check the mode.
		Data link status	The data link is operating.	Check the status of the data links.
	02: Not possible while running	---	The mode is incorrect.	Check the mode.
		Data link status	The data links are active.	Check the status of the data links.
	03: Wrong PC mode	---	The PC is in PROGRAM mode.	Check the modes of the PC and computer.
	04: Wrong PC mode	---	The PC is in DEBUG mode.	Check the modes of the PC and computer.
	05: Wrong PC mode	---	The PC is in MONITOR mode.	Check the modes of the PC and computer.
	06: Wrong PC mode	---	The PC is in RUN mode.	Check the modes of the PC and computer.
	07: Specified node not polling node	---	The specified node is not the polling node.	Check node functioning as the polling node for the network.
	08: Step cannot be executed	---	The mode is incorrect.	Check step status.
23: No such device	01: File device missing	Unit configuration	The specified memory does not exist as a file device.	Mount memory or format EM as file memory.
	02: Memory missing	---	There is no file memory.	Check the file memory to see if it is mounted.
	03: Clock missing	---	There is no clock.	Check the model.
	05: Ethernet setting error	IP-FINS address conversion settings	The IP address of the destination node has not been set.	Executed SETUP and add the IP address setting for the destination node.
24: Cannot start/stop	01: Table missing	Data link tables	The data link tables have not been registered or they contain an error.	Set the data link tables.

Main code	Subcode	Check point	Probable cause	Correction
25: Unit error	02:Parity or checksum error	Contents of memory being processed	The contents of memory contains an error.	Transfer the correct contents to memory.
	03: I/O setting error	I/O Unit configuration	The registered I/O tables do not agree with the actual I/O configuration.	Correct the I/O tables or the I/O configuration.
	04: Too many I/O points	Number of I/O in registered I/O tables	There are too many I/O points and remote I/O points registered.	Change the registered I/O table so that it is within the limit.
	05: CPU bus error	CPU bus line	An error occurred in data transfer between the CPU and a CPU Bus Unit.	Check Units, Boards, and cables to be sure they are connected correctly and then execute the ERROR CLEAR command.
	06: I/O duplication	Rack numbers, Unit numbers, and I/O addresses in PC Setup	The same number/address was set more than once.	Check the PC Setup and correct the numbers/addresses so that each is used only once.
	07: I/O bus error	I/O bus line	An error occurred in data transfer between the CPU and an I/O Unit.	Check Units, Boards, and cables to be sure they are connected correctly and then execute the ERROR CLEAR command.
	09: SYSMAC BUS/2 error	SYSMAC BUS/2 transmission path	An error occurred in data transfer on the SYSMAC BUS/2 line.	Check Units, Boards, and cables to be sure they are connected correctly and then execute the ERROR CLEAR command.
	0A: CPU Bus Unit error	CPU Bus Unit transmission path	An error occurred in data transfer for a CPU Bus Unit.	Check Units, Boards, and cables to be sure they are connected correctly and then execute the ERROR CLEAR command.
	0D: SYSMAC BUS No. duplication	Word settings	The same word is allocated more than once.	Check the I/O tables and correct the allocations.
	0F: Memory error	Status of memory being processed	A memory error has occurred in internal memory, a memory card, or EM file memory.	For internal memory, write the correct data and then execute the command. For a memory card or EM file memory, the file data has been destroyed. Execute the FILE MEMORY FORMAT command. If the problem persists, replace the memory.
	10: SYSMAC BUS terminator missing	---	Terminators have not been set.	Set the terminators correctly.

Main code	Subcode	Check point	Probable cause	Correction
26: Command error	01: No protection	Command protection for program area	The specified area is not protected.	An attempt was made to clear protection on an area that is not protected, i.e., there is no reason to clear protection.
	02: Incorrect password	---	An incorrect password has been specified.	Specify the correct password.
	04: Protected	---	The specified area is protected.	Clear protection from a Programming Device and then execute the command.
		Number of commands being executed	The node receiving the command is already processing 5 commands.	Wait for current processing to end or force the end of a current process and then execute the command.
	05: Service already executing	---	The service is being executed.	Wait for the service to end or force the end of the service and then execute the command.
	06: Service stopped	---	The service is not being executed.	If necessary, start the service.
	07: No execution right	LNK indicator on Unit/Board	The right to execute the service has not been obtained.	The local node is not in the data link. Execute the command from a node that is participating in the data link.
		---	A response was not returned because a buffer error occurred.	Restart the Board. If the problem persists, replace the Board.
	08: Settings not complete	Settings required before execution	The settings required before executing the service have not been made.	Make the required settings.
	09: Necessary items not set	Command data	The required elements have not been set in the command data.	Check the command format and set the required elements in the command data.
	0A: Number already defined	Action numbers and transition numbers of program in program area	The specified action/ transition number has already been registered in a previous program.	Check the action/transition numbers to ones that are not being used and then execute the command.
	0B: Error will not clear	Cause of error being cleared	The cause of the error has not been removed.	Remove the cause of the error and then execute ERROR CLEAR.
30: Access right error	01: No access right	---	The access right is held by another device. (SFC online editing is being executed from another node or ACCESS RIGHT ACQUIRE or ACCESS RIGHT FORCE ACQUIRE has been executed by another node.)	Wait until the access right is released and then execute the command. ACCESS RIGHT ACQUIRE or ACCESS RIGHT FORCE ACQUIRE can be executed to obtain the access right, but this may adversely affect processing by the node that previously held the access right.
40: Abort	01: Service aborted	---	Service was aborted with ABORT command.	---

SECTION 6
ITNC-EIS01-CST and ITNC-EIX01-CST (CS1 Bus Interface)

This section describes the ITNC-EIS01-CST and ITNC-EIX01-CST Open Network Controllers.

6-1 Introduction 180
6-1-1 Overview 180
6-1-2 Product Configurations 180
6-2 Functions 181
6-2-1 Connections with PC 181
6-2-2 BUSCS1_UNIT (CS1 Bus Connection NP) Functions 182
6-2-3 Precautions on System Design 183
6-3 Hardware Settings 184
6-4 Software Settings 187
6-4-1 CS1 Settings 187
6-4-2 File Settings in Open Network Controller 188
6-5 FINS Commands 191
6-5-1 FINS Commands for BUSCS1_UNIT and CPU Bus Unit 191
6-5-2 FINS Command for BUSCS1UNIT 191
6-5-3 FINS Commands for CPU Bus Unit 191

6-1 Introduction

6-1-1 Overview

The ITNC-EIS01-CST or ITNC-EIX01-CST Open Network Controller provides an interface to connect to the I/O bus of a CS1-series Programmable Controllers. These Open Network Controllers function as CS1-series CPU BUS Units.

This section provides information on the unique functions of the ITNC-EIS01-CST and ITNS-EIX01-CST. For the basic functions of Open Network Controllers, refer to *Section 1* through *Section 5*.

6-1-2 Product Configurations

ITNC-EIS01-CST Standard Model with CS1 Bus Interface

The ITNC-EIS01-CST Standard Model is shown below. Use the illustration to confirm you have the correct model.

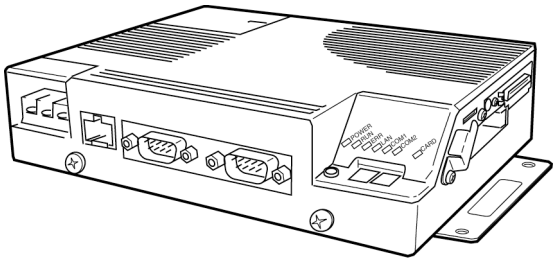

ITNC-EIS01-CST

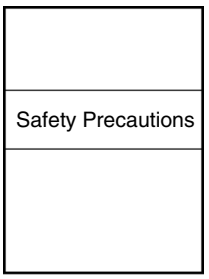

Safety Precautions

ITNC-EIX01-CST Expansion Model with CS1 Bus Interface

The ITNC-EIX01-CST Expansion Model is shown below. Use the illustration to confirm you have the correct model.

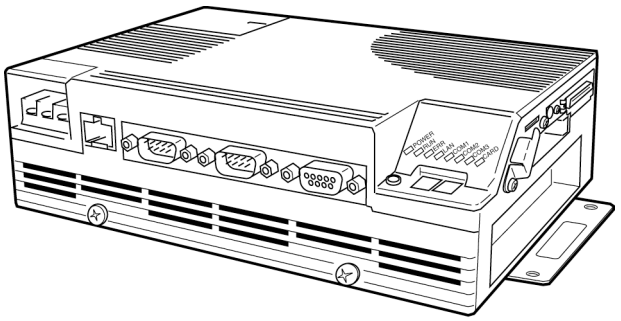

ITNC-EIX01-CST

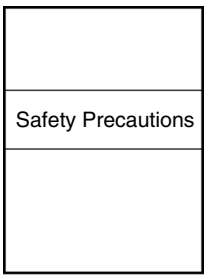

Safety Precautions

ITBC-CN□□□-CST I/O Connecting Cable

The ITBT-CN□□□-CST is shown below. Use the illustration to confirm you have the correct model. The cable length varies with the model as listed in the following table.

Model	Length
ITBC-CN001-CST	1 m
ITBC-CN005-CST	5 m
ITBC-CN012-CST	12 m

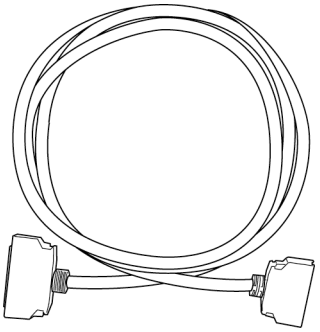

ITBC-CN□□□-CST

6-2 Functions

6-2-1 Connections with PC

As shown below, the ITNC-EIS01-CST or ITNC-EIX01-CST Open Network Controller connects to the CPU Rack or CS1 Expansion Rack. These Open Network Controllers function as CS1-series CPU Bus Units and perform I/O communications with the Programmable Controller.

Example of Connections to CPU Rack

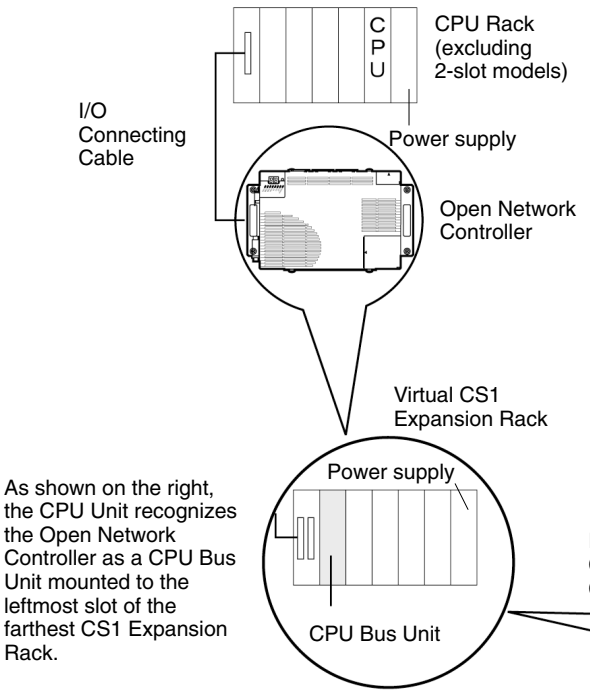

Example of Connections to CS1 Expansion Rack

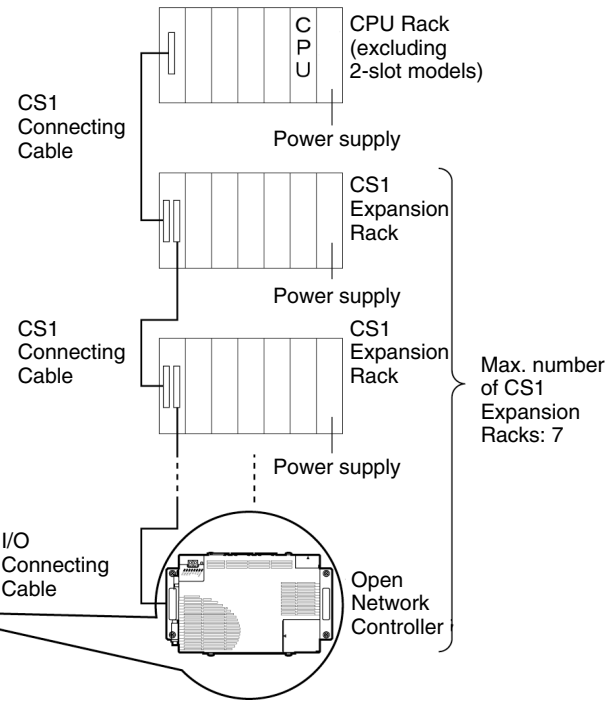

Note 1. Connect the Open Network Controller to the farthest CS1 Expansion Rack.

2. The Open Network Controller is treated as a CS1 Expansion Rack. Therefore, count the Open Network Controller as a CS1 Expansion Rack when calculating the maximum number of connectable CS1 Expansion Racks.
3. The maximum available cable length including the length of the I/O Connecting Cable to the Open Network Controller is 12 m.
4. The Open Network Controller cannot be connected to a C200H Rack.

Refer to *2-1 System Configuration* for network connection examples.

6-2-2 BUSCS1_UNIT (CS1 Bus Connection NP) Functions

The BUSCS1_UNIT is a software component that enables I/O communications through a CS1 bus connection and FINS communications with the CS1-series PC.

As shown below, the BUSCS1_UNIT and the CPU Bus Unit are treated as different nodes on the FINS network.

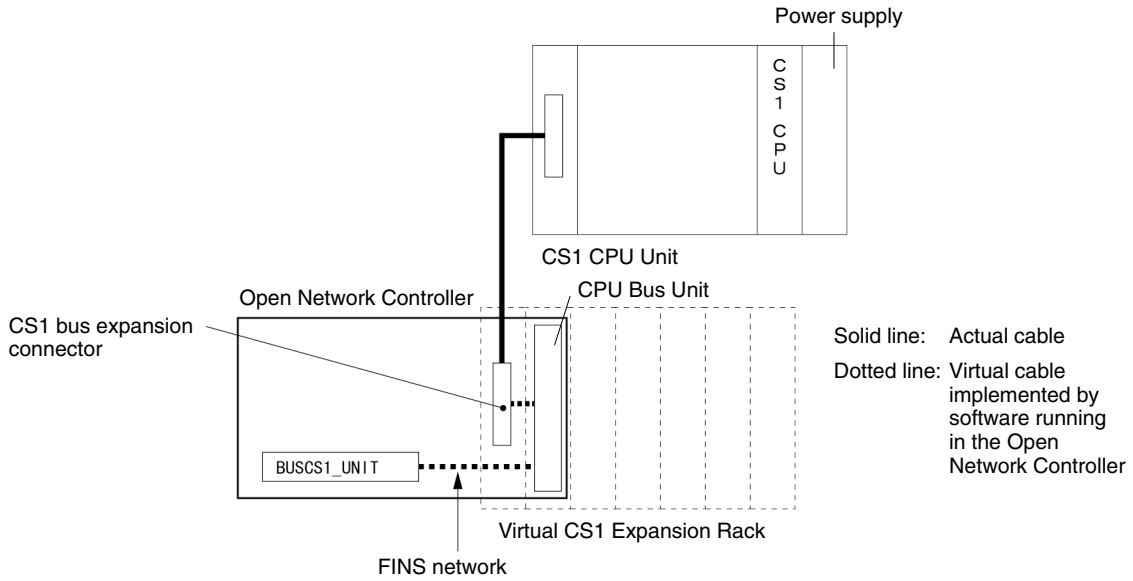

Note The BUSCS1_UNIT and CPU Bus Unit on the Open Network Controller are enabled by the BUSCS1_UNIT NP through a CS1 bus connection.

CS1 CPU Unit I/O Memory Allocations to Event Memory

The I/O memory of the CS1-series CPU Unit can be allocated to the event memory to enable data I/O communications between the CS1 CPU Unit and Open Network Controller.

The following memory areas are can be allocated.

- 20 input areas (Data is written from the memory of the CS1 CPU Unit to the event memory of the Open Network Controller.)
- 20 output areas (Data is written from the event memory of the Open Network Controller to the memory of the CS1 CPU Unit.)
- Data can be allocated for up to 7,784 words of the memory.

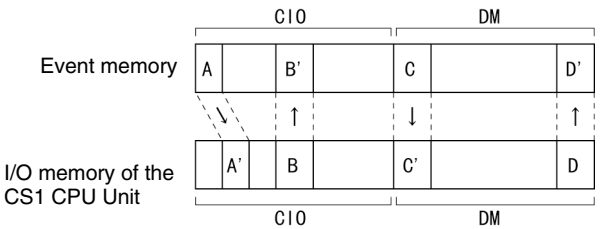

FINS Commands Supported by BUSCS1_UNIT and CPU Bus Unit

As shown below, the BUSCS1_UNIT and the CPU Bus Unit do not support the same FINS commands.

Refer to *6-5 FINS Commands* for details.

FINS Command for BUSCS1_UNIT

The BUSCS1_UNIT supports the following FINS command.

Command code	Name
0501	CONTROLLER DATA READ

FINS Commands for CPU Bus Unit

The CPU Bus Unit supports the following FINS commands.

Command code	Name
0501	CONTROLLER DATA READ
2102	ERROR LOG READ
2103	ERROR LOG CLEAR

6-2-3 Precautions on System Design

The PC will not start operation even after the power supply is turned ON until the CS1 Bus Interface in the Open Network Controller completes initialization. The Open Network Controller requires approximately 40 seconds to start operation after the power supply is turned ON. You must design the system to allow for this delay.

Also, if the power supply to the Open Network Controller is interrupted during operation, the PC will detect an I/O bus error. You must design the system to allow for this possibility.

6-3 Hardware Settings

Nomenclature and Functions

This section gives the names and describes the functions of the ITNC-EIS01-CST and ITNC-EIX01-CST.

The names and functions of the Open Network Controller components will be described using the ITNC-EIX01-CST Expansion Model with a CS1 Bus Interface as an example. The ITNC-EIS01-CST Standard Model with a CS1 Bus Interface is the same, except that it does not have a COM3 port or a connector for Expansion Boards.

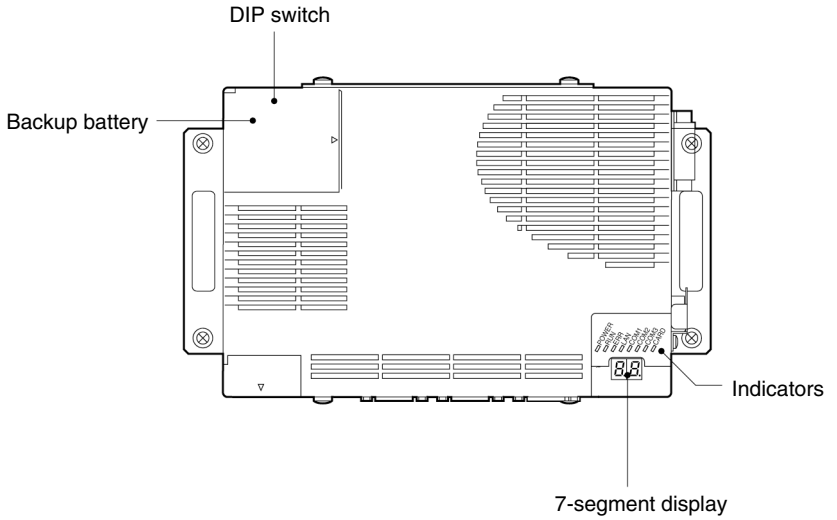

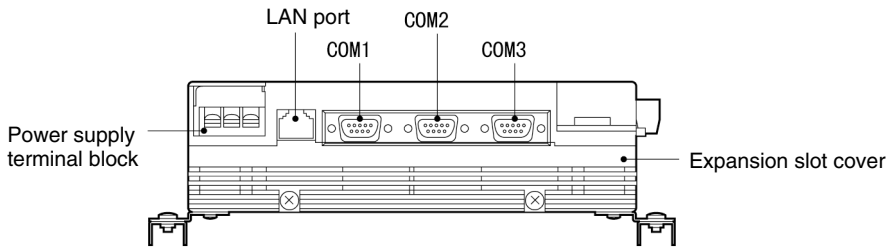

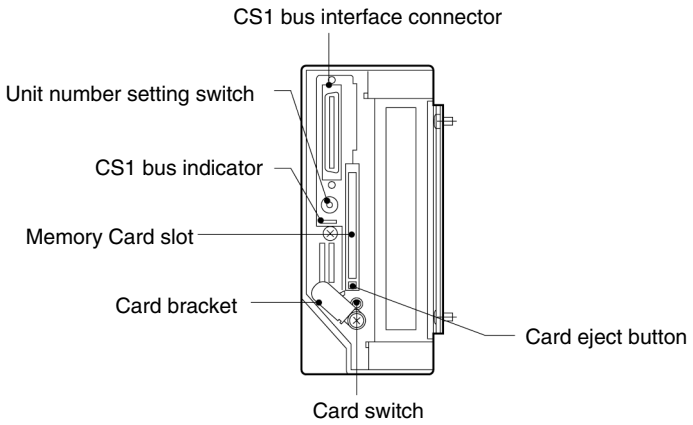

Name	Function
DIP switch	The DIP switch is used to make COM port and 7-segment display settings.
Backup battery	The backup battery backs up the real-time clock and the CMOS RAM. Replace with a C500-BAT08 Battery when required.

Name	Function
Power supply terminal block	The power supply terminal block connects to a 24-V DC power supply.
LAN port	An Ethernet cable for 10Base-T is connected to the Ethernet port.
COM1	RS-232C
COM2	RS-232C
COM3 (only with Expansion Models)	RS-422A/485
Expansion slot cover (ITNC-EIX01-CST only)	The expansion slot is an ISA bus slot. Remove the cover to mount a Controller Link or SYSMAC Board.
Indicators	The indicators show the status of Open Network Controller operation.
7-segment display	The 7-segment display shows the error code, IP address, MAC ID on the DeviceNet network, or the FINS address, according to the DIP switch settings.
Memory Card slot	A Memory Card is mounted in this slot.
Card bracket	This bracket holds the Memory Card in place. Be sure to secure the Card with this bracket.
Card switch	Press the card switch when inserting or removing a Memory Card. • When inserting a Memory Card, press this switch to enable using the card. The CARD indicator will light. • When removing the Memory Card, press this switch to enable removing the card. The CARD indicator will turn OFF.
Card eject button	Press the card eject button to remove the Memory Card. Before pressing this button, press the card switch and make sure the CARD indicator is not lit.
CS1 bus interface connector	Connect the I/O Connecting Cable to the connector.
Unit number setting switch	Use this switch to set the Unit number of the Open Network Controller (as a CPU Bus Unit) for CS1 bus connections. Refer to *6-2 Functions* for information on the CPU Bus Unit.
CS1 bus indicator	The indicator shows the status of the CS1 bus. Refer to *7-3 Error Messages with the ITNC-EIS01-CST or ITNC-EIX01-CST* for details.

Note This section provides information on the CS1 bus indicator, how to set the Unit number setting switch, and how to connect the I/O expansion cable for the CS1. Refer to *Section 3 Hardware* for information on the other indicators, how to connect the Expansion Board, how to make settings in the Open Network Controller, and how to connect cables.

CS1 Bus Indicator

The following table provides information on the CS1 bus indicator. Refer to *Section 3 Hardware* for information on the other indicators.

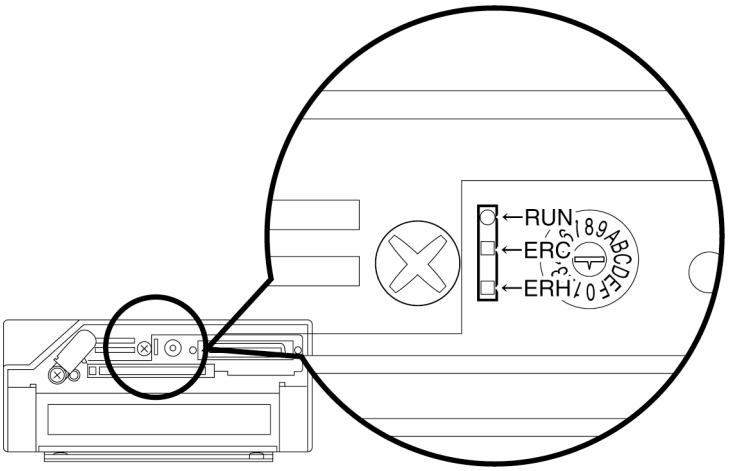

Indicator	Name	Color	Status	Meaning
RUN	Operating	Green	Lit	The CPU Bus Unit is operating.
			Not lit	The CPU Bus Unit is not operating.
ERC	Controller error	Red	Lit	The CPU Bus Unit has an error.
			Not lit	The CPU Bus Unit has no errors.
ERH	PLC error	Red	Lit	The CS1 CPU Unit has an error.
			Not lit	The CS1 CPU Unit has no errors.

Seven-segment Display (Node Number Display)

By setting pin 2 of DIP switch 2 to OFF and setting pin 3 to ON, the node number of the CPU Bus Unit will appear on the 7-segment display.

Refer to *Section 3 Hardware* for details on the 7-segment display and DIP switch settings.

Unit Number Settings

Use the Unit number setting switch to set the Unit number of the Open Network Controller as a CPU Bus Unit for CS1 bus connection.

Note Refer to *6-2 Functions* for details on the CPU Bus Unit.

Set the Unit number to between 0 and 5 (i.e., 0 and 15). Check that the Unit number is not used by any other CPU Bus Unit, such as an Ethernet Unit or Controller Link Unit.

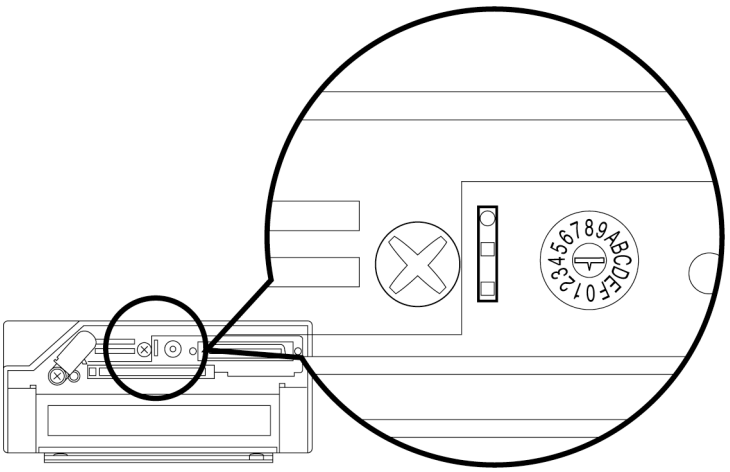

I/O Connecting Cable

Use an I/O Connecting Cable to connect the Open Network Controller and the CS1 CPU Unit or CS1 Expansion Rack.

Note Turn OFF the CS1 and the Open Network Controller before connecting the I/O Connecting Cable.

1, 2, 3... 1. As shown below, connect the smaller connector (50-pin connector) of the I/O Connecting Cable to the CS1 bus interface connector of the Open Network Controller.

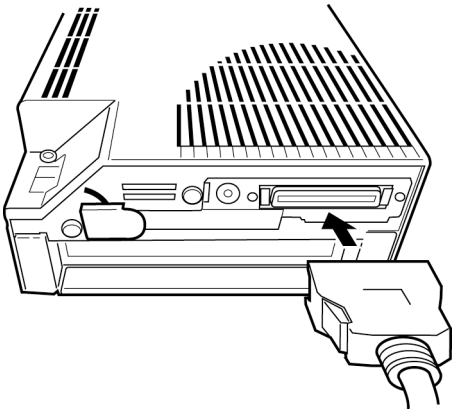

2. Connect the larger connector (68-pin connector) of the I/O Connecting Cable to the expansion connector of the CS1 CPU Rack or CS1 Expansion Rack.

Example: CS1 CPU Rack

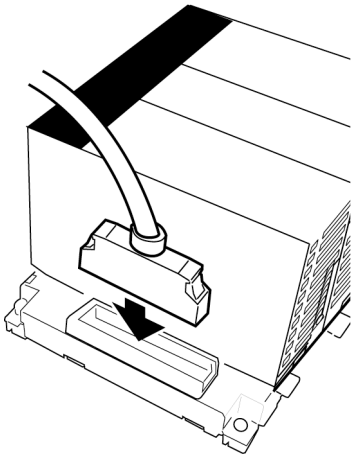

Note When the CS1 Expansion Rack is used, connect the cable to the OUT connector of the farthest CS1 Expansion Rack.

6-4 Software Settings

This section provides information on how to make the following software settings.

CS1 Settings
I/O table creation and routing table settings

Open Network Controller Settings
/etc/FgwQnx/FgwQnx.ini
/etc/FgwQnx/FgwQnxBUSCS1.ini
/etc/FgwQnx/FgwQnxBUSCS1Map.ini

6-4-1 CS1 Settings

Use the CX-Programmer and CX-Net to make CS1 I/O table settings and routing table settings.

I/O Table Creation

Take the following procedure to create the CS1 I/O tables with the CX-Programmer.

Note

1. Before creating the I/O tables with the CX-Programmer, refer to *6-3 Hardware Settings* and connect the Open Network Controller and the CS1 through the CS1 bus and turn ON the Open Network Controller and the CS1, or otherwise the I/O table cannot be created.
2. The Open Network Controller will detect an error (0043) unless the I/O tables is created. Refer to *7-3 Error Messages with the ITNC-EIS01-CST or ITNC-EIX01-CST* for details.

1, 2, 3...

1. Connect the Open Network Controller and CS1 through the CS1 bus and turn ON the Open Network Controller and the CS1.
2. Connect the CX-Programmer and the CS1 online.
3. Select ***PLC***, ***Operation Mode***, and ***Program*** in the CX-Programmer. The PC will be set to PROGRAM mode. This step is not necessary if the PC has been already set to PROGRAM mode.
4. Select ***PLC***, ***Edit***, and ***I/O Table*** (or double-click ***I/O Table*** in the project work space).

   The I/O Table Window will be displayed then. This I/O table has already been saved in the hard disk of the personal computer.
5. Select ***Options*** and ***Create*** in the I/O Table Window.

   Data on the actual I/O tables (i.e., data on the Units actually connected to the CS1) will be copied to the registered I/O table in the CS1.

Routing Table Settings

Use the CX-Net to set the routing tables to be registered in the CS1. Set the local network table of the Open Network Controller (as a CPU Bus Unit) together with the relay network table, if necessary, in the routing tables.

Refer to the *CX-Programmer Operation Manual* for information on how to use the CX-Net. Pay attention to the following points when using the CX-Net.

Note

1. The routing tables are not required if no FINS communications are made.
2. When the routing tables are transferred from the CX-Net to the CPU Unit, the CPU Bus Unit will be reset. This will enable the CPU Bus Unit to validate the routing tables after they have been read. Before transferring the routing tables, check that the system will not cause any problems when the CPU Bus Unit is reset.
3. Check that the local network number set with the routing tables is the same as the /etc/FgwQnx/FgwQnx.ini value set in ***LocalNetworks***. Refer to the information below for the /etc/FwgQnx/FgwQnx.ini settings.

6-4-2 File Settings in Open Network Controller

Make the following file settings in the Open Network Controller.

File name	Contents
/etc/FgwQnx/FgwQnx.ini	Used for the BUSCS1_UNIT startup and local network table settings.
/etc/FgwQnx/FgwQnxBUSCS1.ini	Used for the node number settings for the BUSCS1_UNIT and CPU Bus Unit. Refer to *BUSCS1_UNIT (CS1 Bus Connection NP) Functions* on page 182 for the relationship between the BUSCS1_UNIT and the CPU Bus Unit.
/etc/FgwQnx/FgwQnxBUSCS1Map.ini	Used for allocating data from the event memory of the Open Network Controller to the I/O memory of the CS1 CPU Unit.

The following section provides information on how to set the above files.

/etc/FgwQnx/FgwQnx.ini Make the service startup and local network table settings in this file.

/etc/FgwQnx/FgwQnx.ini

```
;=================================================
; (c) Copyright OMRON Corporation 1999
;     All Rights Reserved
;=================================================
[FgwLibMgr]

Qnx_pFlagMask=

;---------------------------------------------------------
; SERVICES under SCM
;---------------------------------------------------------
[Services]
Services= CPU_UNIT, ETN, BUSCS1
  :
  :
[UnitID]
BUSCS1=20
  :
  :
[RouteTable]
LocalNetworks=(1,17)(2,20)(4,26)
RelayNetworks=
```

The setting items explained here are only those related to the ITNC-EIS01-CST or ITNC-EIX01-CST. Refer to *Section 4 Software Settings* for other setting items.

The item ***BUSCS1*** set by default is required. To start other services, describe the name of service in the services section.

Set the Unit number.
Change the Unit number if necessary.

Set the local network table.
Set the local network number and Unit number of the CPU Bus Unit, separating each with a comma.
The local network number must coincide with that in the routing tables registered in the CS1 CPU Unit.
The routing tables are not required if I/O communications through the CS1 bus are made without FINS communications.

Set the relay network table if necessary.

/etc/FgwQnx/FgwQnxBUSCS1.ini Set the node numbers of the BUSCS1_UNIT and CPU Bus Unit in this file.

Note Refer to *BUSCS1_UNIT (CS1 Bus Connection NP) Functions* on page 182 for the relationship between the BUSCS1_UNIT and CPU Bus Unit.

/etc/FgwQnx/FgwQnxBUSCS1.ini

```
[BUSCS1]
DriverImage=/usr/FgwQnx/bin/BUSCS1drv
MapFile=/etc/FgwQnx/FgwQnxBUSCS1Map.ini
NodeID=1
Memaddr=0xcc000
IOaddr=0x398
IRQ=12
RefreshMethod=0
RefreshTimer=10
Trigger=0
ResetMethod=0
SyncClock=0
[CS1]
NodeID=2
[Processes]
Sender=BUSCS1_Sender
Receiver=BUSCS1_Receiver
Driver=BUSCS1_Driver
Trigger=CrmDrvier
Trigg_Msg=I/O_CRM
MyTrigg_Msg=I/O_BUSCS1
```

Set the node number of the BUSCS1_UNIT.
Change the node number if necessary.

Set the refresh interval of the I/O memory in milliseconds
Set the interval that is longer than the ladder cycle time.

Set the resetting method of the CPU Bus Unit with the set value written to the CS1's AR501. (See note.)
0: The Open Network Controller is hardware reset.
1: Only the BUSCS1_UNIT (NP) is software reset.

Determine whether the Open Network Controller's clock is synchronized with the CS1's clock.
0: Not synchronized.
1: The CS1's clock and the Open Network Controller's clock will be synchronized once when the Open Network Controller starts.

Set the node number of the CPU Bus Unit.
Change the node number if necessary.

Note Refer to the *CS1 Series Operation Manual* for information on how to write data to AR501.

/etc/FgwQnx/FgwQnxBUSCS1Map.ini

Use this file to allocate data from the I/O memory of the CS1 CPU Unit to the event memory of the Open Network Controller.

/etc/FgwQnx/FgwQnxBUSCS1Map.ini

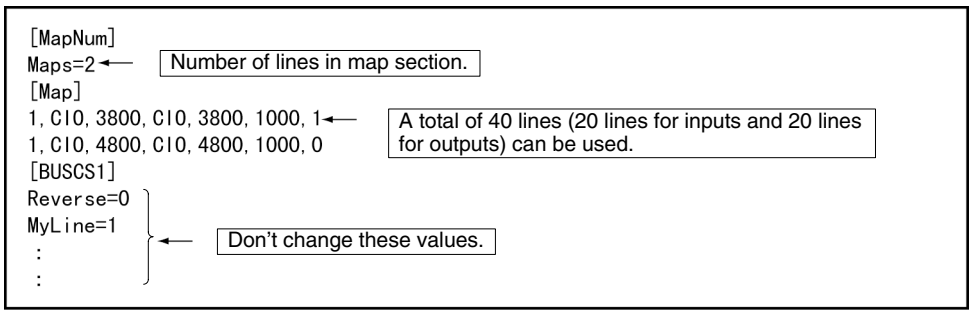

The following areas and sizes are available.

- 20 input areas: The data in the I/O memory of the CS1 is written to the event memory of the Open Network Controller.
- 20 output areas: The data written to the event memory of the Open Network Controller is output to the memory of the Programmable Controller.
- Use a total of 20 or less I/O areas. The execution performance of the ladder program will be affected if more than 20 areas are used.
- A total of 7,784 words can be allocated.

Format

- [MapNum]

  Set *Maps* to the number of lines to execute in the *Map* section. For example, is *Maps* is set to 2, the first two lines set in the *Map* section will be executed.

- [Map]

  Set 1 (fixed), the CS1 area, the CS1 address, the event memory area, the event memory address, the transfer size, and the transfer direction, separating each with a comma, as described below.

Item	Description
1	Always add "1" at the beginning of the format.
CS1 area	Specify the I/O memory area in the CS1 CPU Unit. The following areas can be specified. AR, TF, CF, CIO, HR, WR, TIM, CNT, DM, EM0 to EMC
CS1 address	Specify the address of the first word.
Event memory area	Specify the memory area in event memory, i.e., CIO or DM.
Event memory address	Specify the address of the first word.
Transfer size	Specify the number of words transferred. Up to 7,784 words are available.
Transfer direction	Specify the data transfer direction. 0: Input (Data is copied from the CS1 CPU Unit to the event memory.) 1: Output (Data is copied from the event memory to the CS1 CPU Unit.)

Note The total number of words transferred must not exceed 7,784.

6-5 FINS Commands

This section explains the FINS commands for the BUSCS1_UNIT and CPU Bus Unit.

6-5-1 FINS Commands for BUSCS1_UNIT and CPU Bus Unit

As shown below, the BUSCS1_UNIT and the CPU Bus Unit do not support the same FINS commands.

FINS Command for BUSCS1_UNIT

The BUSCS1_UNIT supports the following FINS command.

Command code	Name
0501	CONTROLLER DATA READ

FINS Commands for CPU Bus Unit

The CPU Bus Unit supports the following FINS commands.

Command code	Name
0501	CONTROLLER DATA READ
2102	ERROR LOG READ
2103	ERROR LOG CLEAR

6-5-2 FINS Command for BUSCS1UNIT

CONTROLLER DATA READ: 0501

Reads the following data from the BUSCS1UNIT.

Command Format

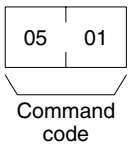

Response Format

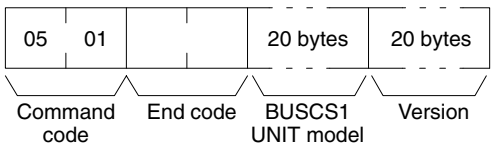

BUSC1UNIT Model and Version (Response)

The model and version are returned as follows:

Model: BUSCS1_UNIT/QNX□□□□□

Version: V2.50 (Spaces will be inserted to fill the remainder.)

6-5-3 FINS Commands for CPU Bus Unit

CONTROLLER DATA READ: 0501

Reads the following data from the CPU Bus Unit.

Command Format

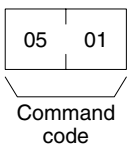

Response Format

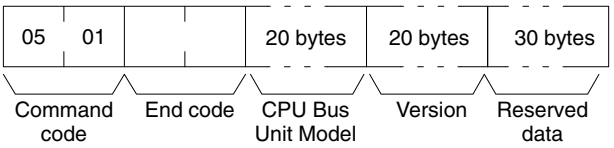

CPU Bus Unit Model and Version (Response)

The model and version are returned as follows:

Model: ITNC-EIS01/EIX01-CST□□□□
Version: V2.50 (Spaces will be inserted to fill the remainder.)

ERROR LOG READ: 2102

Reads the error log of the CPU Bus Unit. The records read will be deleted from the error log.

Command Format

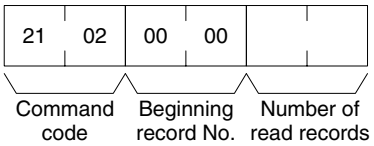

Response Format

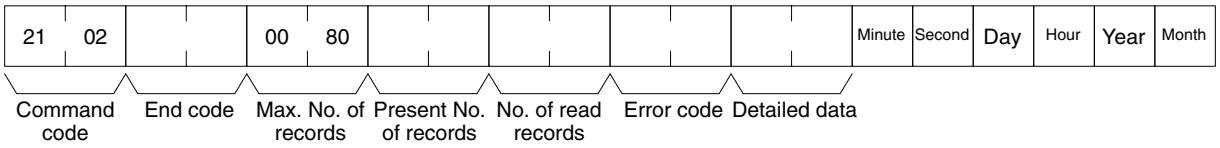

Parameters

Beginning Record No. (Command)
Fixed at 0000.

No. of Read Records (Command)
Specify the number of records up to 128 (80 Hex). If the specified number exceeds the actual number of errors in the error log, all the error log will be read in a normal response format.

Max. No. of Records (Response)
Always 0080 (128 records).

Present No. of Records (Response)
The number of records remaining after the command is executed will be returned. When the number of read records is set to 0, the present number of records will be returned so that the user can check the number of records remaining in the error log.

No. of Read Records (Response)
The number of records actually read will be returned.

Error Code, Detailed Data, and Response
Data on the error log is returned. If there is no detailed data, 0000 will be returned. Refer to the *Error Log Error Codes* for details.

Minute, Second, Day, Hour, Year, and Month (Response)
Based on the time data of the Open Network Controller, the time of each error occurred will be stored in BCD.

Error Log Error Codes

Error code	Detailed data	Meaning	Probable cause	Possible correction or Open Network Controller response
0118	0000	The FINS response exceeded 2,000 bytes.	---	The packet will be discarded.
0118	0001	The FINS response exceeded 2,000 bytes.	---	The packet will be discarded.
000f	0000	The access right to the cyclic area could not be obtained.	The access right is not released by another CPU Bus Unit.	Check the CPU Bus Unit.
0006	0800	The CS1's I/O tables were not registered.		Register the I/O tables.
021a	0003	The CS1's routing tables could not be used.	The routing table is missing or has a parameter error.	Create the routing tables correctly.
0112	0000	The FINS response received was addressed to the local unit.	The FINS response was wrongly addressed.	The packet will be discarded.
010b	0000	The service was not possible due to an error in the CS1.	---	The packet will be discarded.
010e	0000	No transmission was possible because the CS1 had no routing tables.	---	The packet will be discarded.
0110	0000	The number of gateways exceeded the limit.	---	The packet will be discarded.
0108	0000	The CS1 had a routing error.	No corresponding unit existed.	The packet will be discarded.
010d	0000	The CS1 had a routing error.	A routing error resulted.	The packet will be discarded.
010e	0000	The CS1 had a routing error.	The routing table has not been registered.	The packet will be discarded.
0124	0000	The CS1 had a routing error.	The data exceeded the event area size.	The packet will be discarded.
0120	0000	No transmission was possible because the CS1 had no routing tables.	---	The packet will be discarded.

Error Log Clear: 2103

Clears the error log of the CPU Bus Unit.

Command Format

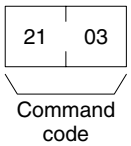

Response Format

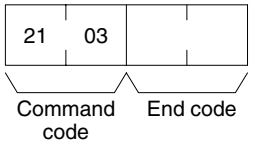

SECTION 7
Troubleshooting

This section describes the use of the 7-segment display, syslog error log file, and DeviceNet indicators to troubleshoot errors that can occur on the Open Network Controller.

7-1 Seven-segment Display and syslog Error Messages 196
7-1-1 Open Network Controller Startup Failures 196
7-1-2 Error Displays 196
7-1-3 Errors and Corrections 197
7-2 DeviceNet Indicator Displays 211
7-2-1 Seven-segment Display 211
7-3 Error Messages with the ITNC-EIS01-CST or ITNC-EIX01-CST 216
7-3-1 Overview 216
7-3-2 Error Messages 216

7-1 Seven-segment Display and syslog Error Messages

7-1-1 Open Network Controller Startup Failures

If, after turning ON the power, the beeper sounds several times, the ERR indicator lights, and one of the following error IDs (i.e., error codes) appears on the 7-segment display, an error has occurred in the Open Network Controller startup. If this occurs, contact your OMRON representative.

Note Make sure that the Board settings (jumper pins, DIP switches) are correct when installing Expansion Boards.

Error IDs Displayed by the 7-segment Display

16, 20, 28, 2C, 34, 38, 58, 94, C0

Note The error IDs will not be scrolled on the 7-segment display when any of the above IDs has been displayed.

7-1-2 Error Displays

Errors that occur on the Open Network Controller can be checked on the 7-segment display or in the syslog file. An error ID will be displayed on the 7-segment display and details will be recorded in the syslog file when an error occurs.

Errors are classified as both “errors” and “warnings.” The differences in the way errors are indicated on the 7-segment display and the syslog file are described next.

Seven-segment Display

Errors classified as warnings are not displayed on the 7-segment display. Up to 20 of the most recent errors are recorded in memory for the 7-segment display.

Note DIP switch pins 2-2 and 2-3 must be turned OFF to display errors on the 7-segment display.

Display Method

The 7-segment display will scroll through the current error IDs, displaying the first two letters of the network provider name followed by the error ID, as shown below. The error ID is displayed 2 digits at a time.

CL → 00 → 08 → DR → 00 → 52 → HL → 00 → 13

The two network provider letters indicate the network providers shown in the following table.

CP	CPU_Unit
ET	ETN_Unit
CL	CLK_Unit
SY	SYSMAC_Unit
DR	DRM_Unit
HL	HLK_Unit
RU	RUT_Unit
BU	BUSCS1_Unit
CD	CARD
PR	Other process

syslog File

Both errors and warnings are recorded in the syslog file as long as there is sufficient capacity on the flash disk. The complete file name is /tmp/syslog.

When the Open Network Controller power is turned ON again, the existing syslog file name changes to /tmp/syslog.old and /tmp/syslog is cleared.

Display Method

An example of the contents of the syslog is shown below. Each line lists the time, a standard message, the network provider name (after “FGW-”), the error ID (after ID=”), and then the error message.

```
Jul 27 10:54:50 node<<1>> syslog: FGW-HLK0: ID=0024| [HLK0] warning: receive timeout
Jul 27 10:54:50 node<<1>> syslog: FGW-HLK0: ID=0063| [HLK0] warning: Retry count over
Jul 27 10:54:57 node<<1>> syslog: FGW-DRM: ID=0091| Error/Communications_Error[0x0020].
```

7-1-3 Errors and Corrections

The following tables list the error IDs that appear for each network provider, along with the steps required to correct the error.

Errors caused by incorrect settings are usually corrected by checking or changing the settings using the Setting Tool. For errors in those parameters not handled by the Setting Tool, refer to the file, section, and entry names listed in the *Correction* sections of the table and check or change the file settings directly. To check or correct settings directly, use the Web Service Ver. 2 Display/Edit Settings Files menu. (Refer to *Display/Edit Settings File Menu* in the *Web Service Ver. 2 User's Manual*. The Web Service Ver. 2 and its manual can be obtained from the ONC website.)

Note Contact your OMRON representative if any error IDs appear that are not listed in the following tables.

CPU_Unit (FGW-CPU)

ID	Level	syslog message		
0005	ERROR	**Fins_new failed**		
			Meaning	The network provider could not be registered.
			Cause	Unit address is already in use.
			Correction	Check that the CPU_UNIT entry under Unit ID in the /etc/FgwQnx/FgwQnx.ini file is set and that the address is not being used by another unit.

ETN_Unit (FGW-ETN)

ID	Level	syslog message		
0004	ERROR	**Fins_new failed**		
			Meaning	The network provider could not be registered.
			Cause	The network number or unit address is already in use.
			Correction	Use the Setting Tool to check that the network number is used only once. Also, check that the unit address under the ETN entry under Unit ID in the /etc/FgwQnx/FgwQnx.ini file is not being used by another unit.
0006	ERROR	**bind error: errno %d, %s**		
			Meaning	The IP socket cannot be bound.
			Cause	Same as above.
			Correction	If the error occurs frequently even after restarting the Controller, replace the Controller.
0007	WARNING	**no IP Table entry on this system**		
			Meaning	The IP table cannot be accessed.
			Cause	The /etc/FgwQnx/FgwQnxEtn.ini file does not exist or the IP table is not set.
			Correction	Check /etc/FgwQnx/FgwQnxEtn.ini and set the IP table using the Setting Tool.
0008	WARNING	**sendto failed: errno %d, %s**		
			Meaning	A socket send failed.
			Cause	Same as above.
			Correction	Retry.
0009	WARNING	**recvfrom error: errno %d, %s**		
			Meaning	A socket receive failed.
			Cause	Same as above.
			Correction	Retry.

0010	WARNING	**couldn't find node %d on IpTable**		
			Meaning	The node specified by %d in the syslog message is not in the IP table.
			Cause	Same as above.
			Correction	Set the IP table correctly using the Setting Tool.

CLK_Unit (FGW-CLK)

ID	Level	syslog message		
0001	ERROR	**[CLK_UNIT] Fins_new Failed UnitID[%d] name[%s]**		
			Meaning	The network provider could not be registered.
			Cause	The network number or unit address is already in use.
			Correction	Use the Setting Tool to check that the network number is used only once. Also, check that the unit address under CLK entry under Unit ID in the /etc/FgwQnx/FgwQnx.ini file is not being used by another unit.
0002	ERROR	**[CLK_UNIT_SENDER] Fins_duplicate failed UnitID[%d] name[%s]**		
			Meaning	The network provider could not be registered.
			Cause	The network number or unit address is already in use.
			Correction	Use the Setting Tool to check that the network number is used only once. Also, check that the unit address under CLK entry under Unit ID in the /etc/FgwQnx/FgwQnx.ini file is not being used by another unit.
0003	ERROR	**[CLK_UNIT] Get kill signal.**		
			Meaning	An end signal was received.
			Cause	The program was stopped by another error.
			Correction	Correct the errors for other error IDs and restart the Controller.
0006	ERROR	**[CLK_DRV] Get kill signal.**		
			Meaning	An end signal was received.
			Cause	The program was stopped by another error.
			Correction	Correct the errors for other error IDs and restart the Controller.
0008	ERROR	**Board name NG! INI:%s read:%s**		
			Meaning	The Controller Link Board is not the 3G8F5-CLK01.
			Cause 1	The correct Controller Link Board is not mounted.
			Correction 1	Make sure the Controller Link Board is mounted properly and securely.
			Cause 2	The Board DIP switch and /etc/FgwQnx/FgwQnxClk.ini have different settings.
			Correction 2	Check that 3G8F5-CLK01 is set as the Board Name entry under CLK_UNIT in the /etc/FgwQnx/FgwQnxClk.ini file.
0010	ERROR	**initCLK Error! (%d)**		
			Meaning	Initialization failed.
			Cause 1	The unit address setting is wrong.
			Correction 1	Check that the CLK entry is set between 16 and 31 under Unit ID in the /etc/FgwQnx/FgwQnx.ini file.
			Cause 2	The memory address setting is wrong.
			Correction 2	Check that the base address is set under CLK_UNIT in the /etc/FgwQnx/FgwQnxClk.ini file.
0012	ERROR	**Unable to attach interrupt. (CLK)**		
			Meaning	The IRQ setting is wrong.
			Cause	Same as above.
			Correction	Match the IRQ entry under CLK_UNIT in the /etc/FgwQnx/FgwQnxClk.ini file to the jumper pin settings for the Controller Link Board.

0015	WARNING	**[CLK_DRV] time out...[%d] Debug No.%d**		
			Meaning	The FINS command could not be sent.
			Cause	Same as above.
			Correction	Resend the command.
0016	ERROR	**[Clk_DRV] Sub Profile not found.**		
			Meaning	/etc/FgwQnx/FgwQnxClk.ini cannot be found.
			Cause	Same as above.
			Correction	Check /etc/FgwQnx/FgwQnxClk.ini. If the file does not exist, return to the default Controller settings. (Turn ON pin 4 on SW2.)
0024	ERROR	**[CLK_UNIT] program end (terminate)**		
			Meaning	The program stopped.
			Cause	CLK_UNIT was ended by a signal.
			Correction	Correct the errors for other error IDs and restart the Controller.

SYSMAC_Unit (FGW-SYSMAC)

ID	Level	syslog message		
0001	WARNING	**[SysmacCpu] Subprofile not found.**		
			Meaning	/etc/FgwQnx/FgwQnxSysmac.ini cannot be found.
			Cause	Same as above.
			Correction	Check /etc/FgwQnx/FgwQnxSysmac.ini.
0002	ERROR	**[Sysmac] Fgw entry faild**		
			Meaning	The network provider could not be registered.
			Cause	The network number or unit address is already in use.
			Correction	Use the Setting Tool to check that the network number is used only once. Also, check that the unit address under SYSMAC0 entry under Unit ID in the /etc/FgwQnx/FgwQnx.ini file is not being used by another unit.
0006	ERROR	**[SysmacCpu] Terminate.**		
			Meaning	An end signal was received.
			Cause	The program was stopped by another error.
			Correction	Correct the errors for other error IDs and restart the Controller.
0007	ERROR	**[SysmacMbx] Parameter failed.**		
			Meaning	The following command line is wrong.
			Cause	Same as above.
			Correction	Check that sysmacCpu –n 0 is set as the Command Line entry under SYSMAC0 in the /etc/FgwQnx/FgwQnx.ini file. Do not set the value to less than 0.
0008	ERROR	**[SysmacMbx] Subprofile not found.**		
			Meaning	/etc/FgwQnx/FgwQnxSysmac.ini cannot be found.
			Cause	Same as above.
			Correction	Check /etc/FgwQnx/FgwQnxSysmac.ini. If the file does not exist, return to the default Controller settings. (Turn ON pin 4 on SW2.)

0012	ERROR	**[SysmacDrv] Sysmac Board Initial Time Out**		
			Meaning	Initialization timed out.
			Cause 1	The correct SYSMAC Board is not mounted.
			Correction 1	Make sure the SYSMAC Board is mounted properly and securely.
			Cause 2	The base address and IP port settings are wrong.
			Correction 2	Match the base address and IP port settings under SYSMAC_INFO0 in the / etc/FgwQnx/FgwQnxSysmacDriver.ini file to the SYSMAC Board settings.
0015	WARNING	**[SysmacDrv] Terminate.**		
			Meaning	The network provider could not be registered.
			Cause	The network number or unit address is already in use.
			Correction	Use the Setting Tool to check that the network number is used only once. Also, check that the unit address under SYSMAC0 entry under Unit ID in the / etc/FgwQnx/FgwQnx.ini file is not being used by another unit.
0016	ERROR	**[SysmacCyc] Parameter failed.**		
			Meaning	The following command line is wrong.
			Cause	Same as above.
			Correction	Check that sysmacCpu –n 0 is set as the Command Line entry under SYSMAC0 in the / etc/FgwQnx/FgwQnx.ini file. Do not set the value to less than 0.
0017	ERROR	**[SysmacCyc] Subprofile not found.**		
			Meaning	The Event Cycle Time setting (the value indicated by %d in the syslog message) is wrong.
			Cause	Same as above.
			Correction	Use the Setting Tool to set the Event Cycle Time to between 1 and 10,000.
0023	ERROR	**[CyclicSvc] Terminate.**		
			Meaning	The /etc/FgwQnx/FgwQnxSysmac.ini cannot be found.
			Cause	Same as above.
			Correction	Check the /etc/FgwQnx/FgwQnxSysmac.ini file. If the file does not exist, return to the default Controller settings. (Turn ON pin 4 on SW2.)

DRM_Unit (FGW-DRM)

ID	Level	syslog message		
0001	ERROR	**Profile Error.UnitID = [%d]**		
			Meaning	The unit address setting (indicated by %d in the syslog message) is wrong.
			Cause	Same as above.
			Correction	Check that the DRM entry is set between 16 and 31 under Unit ID in the / etc/FgwQnx/FgwQnx.ini file.
0002	ERROR	**Profile Error.NodeID = [%d]**		
			Meaning	The local node number setting (indicated by %d in the syslog message) is wrong.
			Cause	Same as above.
			Correction	Check that the node number is set between 0 and 63 using the Setting Tool.
0003	ERROR	**Profile Error.IrqNo = [%d]**		
			Meaning	The IRQ setting (indicated by %d in the syslog message) is wrong.
			Cause	Same as above.
			Correction	Check that the IRQ number entry is set to 12 or 15 under DRM in the /etc/FgwQnx/FgwQnx.ini file.

0004	ERROR	**Profile Error.MemAddress = [0x%x]**		
			Meaning	The memory address (indicated by %x in the syslog message) is wrong.
			Cause	Same as above.
			Correction	Check that the memory address is set under DRM in the /etc/FgwQnx/FgwQnxDrm.ini file. (The following 14 settings are supported: 0xC8000, 0xCC000, 0xD000, 0xD4000, 0xD8000, 0xDC000, 0xE000, 0xE4000, 0xE8000, 0xEC000, 0xF000, 0xF4000, 0xF8000, and 0xFC000. The default is 0xCC000.)
0005	ERROR	**Profile Error.PortAddress = [%d]**		
			Meaning	The port address setting (indicated by %d in the syslog message) is wrong.
			Cause	Same as above.
			Correction	Check that the port address is set under DRM in the /etc/FgwQnx/FgwQnxDrm.ini file. (The following 4 settings are supported: 0x378, 0x388, 0x398, 0x3A8. The default is 0x398.)
0006	ERROR	**Profile Error.Baudrate = [%d]**		
			Meaning	The baud rate setting is wrong.
			Cause	Same as above.
			Correction	Correct the setting using the Setting Tool.
0007	ERROR	**Profile Error.StartScanMode = [%d]**		
			Meaning	The startup scan mode setting is wrong.
			Cause	Same as above.
			Correction	Use the Setting Tool to correct the startup scan mode setting.
0008	ERROR	**Profile Error.ScanCycleTime = [%d]**		
			Meaning	The scan cycle time setting (indicated by %d in the syslog message) is wrong.
			Cause	Same as above.
			Correction	Use the Setting Tool to set the scan cycle time to between 0 and 500.
0009	ERROR	**Profile Error.ComErrStop = [%d]**		
			Meaning	The communications error handling setting is wrong.
			Cause	Same as above.
			Correction	Use the Setting Tool to correct the setting for operation for communications errors.
0010	ERROR	**Profile Error.EventCycleTime = [%d]**		
			Meaning	The event cycle time setting (indicated by %d in the syslog message) is wrong.
			Cause	Same as above.
			Correction	Use the Setting Tool to set the event cycle time to between 1 and 10,000.
0011	ERROR	**Profile Error.InAreaSize1 = [%d]**		
			Meaning	The input area 1 size setting (indicated by %d in the syslog message) is wrong.
			Cause	Same as above.
			Correction	Use the Setting Tool to set the input area 1 size to between 1 and 128.
0012	ERROR	**Profile Error.InAreaSize2 = [%d]**		
			Meaning	The input area 2 size setting (indicated by %d in the syslog message) is wrong.
			Cause	Same as above.
			Correction	Use the Setting Tool to set the input area 2 size to between 1 and 128.
0013	ERROR	**Profile Error.OutAreaSize1 = [%d]**		
			Meaning	The output area 1 size setting (indicated by %d in the syslog message) is wrong.
			Cause	Same as above.
			Correction	Use the Setting Tool to set the output area 1 size to between 1 and 128.

0014	ERROR	**Profile Error.OutAreaSize2 = [%d]**		
			Meaning	The output area 2 size setting (indicated by %d in the syslog message) is wrong.
			Cause	Same as above.
			Correction	Use the Setting Tool to set the output area 2 size to between 1 and 128.
0015	ERROR	**Profile Error.StatusAreaSize = [%d]**		
			Meaning	The status area size setting (indicated by %d in the syslog message) is wrong.
			Cause	Same as above.
			Correction	Use the Setting Tool to set the status area size to 81.
0021	ERROR	**Fins_new Failed.**		
			Meaning	The network provider could not be registered.
			Cause	The network number or unit address is already in use.
			Correction	Use the Setting Tool to check that the network number is used only once. Also, check that the unit address under DRM entry under Unit ID in the /etc/FgwQnx/FgwQnx.ini file is not being used by another unit.
0024	ERROR	**Can't exec process=%s.**		
			Meaning	The process cannot be executed.
			Cause	Same as above.
			Correction	Check the driver process names and priorities.
0026	ERROR	**Unit Duplicate.**		
			Meaning	The process has already been started.
			Cause	A process with the same name has already been started.
			Correction	Make sure that the DRM_UNIT has not been already been started.
0028	ERROR	**Don't Open Scanlist file = %s .**		
			Meaning	The scan list file cannot be found.
			Cause	Either the specified scan list file does not exist or cannot be used.
			Correction	Check /etc/FgwQnx/scanlist.ini.
0031	ERROR	**Com Interrupt Time Out.**		
			Meaning	The DeviceNet Unit could not be initialized.
			Cause	There is an error in the DeviceNet Unit.
			Correction 1	Make sure that the DeviceNet Unit is properly and securely mounted.
			Correction 2	Check the IRQ, memory address, and port address settings under DRM in the /etc/FgwQnx/FgwQnxDrm.ini file.
0032	ERROR	**Command Ack Time Out.**		
			Meaning	Acknowledge was not returned.
			Cause	There is an error in the DeviceNet Unit.
			Correction	If the error occurs frequently even after restarting the DeviceNet Unit, replace the Unit.
0033	ERROR	**I/O refresh Time Out.**		
			Meaning	The I/O refresh timed out.
			Cause	There is an error in the DeviceNet Unit.
			Correction	If the error occurs frequently even after restarting the DeviceNet Unit, replace the Unit.

0046	ERROR	**resetDrm Error[%d].**		
			Meaning	The DeviceNet Unit could not be reset.
			Cause	There is an error in the DeviceNet Unit.
			Correction	Check the IRQ, memory address, and port address settings under DRM in the /etc/FgwQnx/FgwQnxDrm.ini file.
0047	ERROR	**sysgoDrm Error[%d].**		
			Meaning	There is an error in the program in the DeviceNet Unit.
			Cause	There is an error in the DeviceNet Unit.
			Correction	If the error occurs frequently even after restarting the DeviceNet Unit, replace the Unit.
0048	ERROR	**registerScanlist Error[%s],MacID=[%d].**		
			Meaning	The MAC ID in the scan list (indicated by %d in the syslog message) is wrong.
			Cause	Same as above.
			Correction	Use the Setting Tool to check the contents of the scan list.
0049	ERROR	**addObjectClass Error[%d].**		
			Meaning	The DeviceNet Unit does not support FINS.
			Cause	Same as above.
			Correction	If the error occurs frequently even after restarting the DeviceNet Unit, replace the Unit.
0051	ERROR	**MacID Duplicate.**		
			Meaning	The same node number has been set twice.
			Cause	Same as above.
			Correction	Use the Setting Tool to check that the same DRM Unit node number and the same slave unit node number in the scan list have not been used more than once.
0052	ERROR	**online Error[%d].**		
			Meaning	Online status cannot be achieved.
			Cause	The network has not been started up or the network settings are wrong.
			Correction	Use the Setting Tool to check the baud rate setting.
0053	ERROR	**StartScan Error [%d].**		
			Meaning	The scan cannot be started.
			Cause	No nodes are set in scanlist.ini.
			Correction	Check the contents of scanlist.ini.
0055	WARNING	**[scanlist] Error MacID [%d].**		
			Meaning	The MacID setting in the scan list file (indicated by %d in the syslog message) is wrong.
			Cause	Same as above.
			Correction	Set the MacID setting in the scan list to between 0 and 63.
0056	WARNING	**[scanlist] Error InArea [%d].**		
			Meaning	An input area setting in the scan list (indicated by %d in the syslog message) is wrong.
			Cause	Same as above.
			Correction	Set the input area setting in the scan list again.
0057	WARNING	**[scanlist] Error InOffset [%d].**		
			Meaning	An input area offset setting in the scan list file (indicated by %d in the syslog message) is wrong.
			Cause	Same as above.
			Correction	Check that the start address for the input areas in the scan list are correct.

0058	WARNING	**[scanlist] Error InSize [%d].**		
			Meaning	An input size setting in the scan list file (indicated by %d in the syslog message) is wrong.
			Cause	Same as above.
			Correction	Check the scan list file to see if the input area size is correct.
0059	WARNING	**[scanlist] Error InOffset+InSize [%d].**		
			Meaning	The sum of the input offset and input size in the scan list file is beyond the range for the input area.
			Cause	Same as above.
			Correction	Make sure the input area settings in the scan list are correct.
0060	WARNING	**[scanlist] Error OutArea [%d].**		
			Meaning	An output area setting in the scan list file (indicated by %d in the syslog message) is wrong.
			Cause	Same as above.
			Correction	Check the scan list output area settings.
0061	WARNING	**[scanlist] Error OutOffset [%d].**		
			Meaning	An output area offset setting in the scan list file (indicated by %d in the syslog message) is wrong.
			Cause	Same as above.
			Correction	Check that the start address for the output areas in the scan list are correct.
0062	WARNING	**[scanlist] Error OutSize [%d].**		
			Meaning	An input size setting in the scan list file (indicated by %d in the syslog message) is wrong.
			Cause	Same as above.
			Correction	Check the scan list file to see if the output area size is correct.
0063	WARNING	**[scanlist] Error OutOffset+OutSize [%d].**		
			Meaning	The sum of the output offset and output size in the scan list file is beyond the range for the output area.
			Cause	Same as above.
			Correction	Make sure the output area settings in the scan list are correct.
0064	WARNING	**Fins Command Error[%x %x]**		
			Meaning	The FINS command is wrong.
			Cause	Same as above.
			Correction	Send a correct FINS command.
0065	WARNING	**Receive Other Proto Type %d**		
			Meaning	The received FINS command is not supported.
			Cause	Same as above.
			Correction	Send a supported FINS command.
0066	WARNING	**Get kill signal.**		
			Meaning	An end signal was received.
			Cause	The program was stopped by another error.
			Correction	Correct the errors for other error IDs and restart the Controller.
0067	WARNING	**Fins Que Overflow**		
			Meaning	Further FINS messages cannot be processed.
			Cause	The processing load is too high.
			Correction	Reduce the load.

0068	WARNING	**Refresh Que Overflow**		
			Meaning	I/O cannot be refreshed.
			Cause	The processing load is too high.
			Correction	Reduce the load.
0069	WARNING	**Event Que Overflow**		
			Meaning	Further events cannot be processed.
			Cause	The processing load is too high.
			Correction	Reduce the load.
0089	ERROR	**Profile Error. TickSize =[%d].**		
			Meaning	The tick size setting (indicated by %d in the syslog message) is wrong.
			Cause	Same as above.
			Correction	Correct the tick size entry under TickSize in the /etc/FgwQnx/FgwQnx.ini file (The default is 500).
0091	ERROR	**Error Communications_Stoppage[%x]**		
			Meaning	Online status cannot be achieved.
			Cause 1	Power is not supplied to the network.
			Correction 1	Supply power to the network.
			Cause 2	A device listed in the scan list does not exist.
			Correction 2	Use the Setting Tool to remove nodes that do not exist on the network.
			Cause 3	A device has a different size from the one listed in the scan list.
			Correction 3	Use the Setting Tool to set the actual device data size in the scan list.
0092	WARNING	**Error Canceled**		
			Meaning	An error ID of 0091 was canceled.
			Cause	Same as above.
			Correction	Normal message (not an error).
0095	ERROR	**Fins_changeNetworkProvider Failed.**		
			Meaning	The network provider could not be registered.
			Cause	The network number or unit address is already in use.
			Correction	Use the Setting Tool to check that the network number is used only once. Also, check that the unit address under DRM entry under Unit ID in the /etc/FgwQnx/FgwQnx.ini file is not being used by another unit.
0096	ERROR	**FgwProfile_setPriorityEx Failed.**		
			Meaning	Priority could not be set.
			Cause	Same as above.
			Correction	Check that DRM=23 is set under Priority in the /etc/FgwQnx/FgwQnx.ini file.
0097	ERROR	**FgwProfile_setScheduleType Failed.**		
			Meaning	The schedule could not be set.
			Cause	Same as above.
			Correction	Check that DRM=OTHER is set under Priority in the /etc/FgwQnx/FgwQnx.ini file.
0098	WARNING	**online OK.**		
			Meaning	Online status has been achieved.
			Cause	Same as above.
			Correction	Normal message (not an error)

HLK_Unit (FGW-HLK)

Note: The star (*) at the start of the syslog message (HLK*) is replaced by a value to indicate HLK0 to HLK2.

ID	Level	syslog message		
0002	ERROR	**[HLK*] error : Argument mismatch. (argc = %d_argv[0] = %s)**		
			Meaning	The number of arguments is wrong.
			Cause	Same as above.
			Correction 1	Do not start only HLK*.
			Correction 2	Check the command lines under HLK* in the /etc/FgwQnx/FgwQnx.ini for mistakes.
0003	ERROR	**[HLK*] error : Name is already used.**		
			Meaning	The process has already been started.
			Cause	A process with the same name has already been started.
			Correction	Make sure that the same network provider has not been set more than once.
0005	ERROR	**[HLK*] error : COM configuration error(ret = %d)**		
			Meaning	COM settings are wrong. The incorrect setting is indicated by %d in the syslog message. -6: The data bit length for the corresponding HLK Unit is wrong. -7: The stop bit length for the corresponding HLK Unit is wrong. -8: The parity for the corresponding HLK Unit is wrong. If another value is returned, the COM Port itself may have an error.
			Cause	Same as above.
			Correction	Correct the setting indicated by the returned value.
0010	ERROR	**[HLK*] error : COMs doesn't Set.**		
			Meaning	The number of serial lines is not set.
			Cause	Same as above.
			Correction	Use the Setting Tool to set the number of serial lines under "Serial settings" to 3.
0011	ERROR	**[HLK*] error : Don't match COM Setting.**		
			Meaning	The corresponding HLK Unit is not set to any COM port.
			Cause	Same as above.
			Correction	Use the Setting Tool to allocate the HLK Unit to a COM Port under "Serial settings".
0012	ERROR	**[HLK*] error : my UnitID (%d)**		
			Meaning	The HLK* Unit address setting (indicated by %d in the syslog message) is wrong.
			Cause	Same as above.
			Correction	Set the HLK* entry under UnitID in the /etc/FgwQnx/FgwQnx.ini file to between 16 and 31.
0013	ERROR	**[HLK*] error : my NodeID (%d)**		
			Meaning	The HLK* node address setting (indicated by %d in the syslog message) is wrong.
			Cause	Same as above.
			Correction	Use the Setting Tool to correct the setting.
0016	ERROR	**[HLK*] error : No node information data.**		
			Meaning	/etc/FgwQnx/HlkNetTbl.ini cannot be found or the node address table browsed by the HLK* Unit is not registered.
			Cause	Same as above.
			Correction	Check that /etc/FgwQnx/HlkNetTbl.ini exists and use the Setting Tool to set the HlkNetTbl for the corresponding HLK Unit.

0017	ERROR	**[HLK*] error : swaycnvt.dat don't exist or don't open.**		
			Meaning	/etc/FgwQnx/swaycnvt.dat cannot be found or cannot be opened.
			Cause	Same as above.
			Correction	Check /etc/FgwQnx/swaycnvt.dat.
0018	ERROR	**[HLK*] error : Can't exec Driver file [%s]**		
			Meaning	hlkdrv (the HLK driver) cannot be found at the path indicated by %d in the syslog message.
			Cause	Same as above.
			Correction	Check the Web Wervice task list to see if hlkdrv exists.
0019	ERROR	**[HLK*] error : Fins_new failed.(FGW-HLK*)**		
			Meaning	The network provider could not be registered.
			Cause	The network number or unit address is already in use.
			Correction	Use the Setting Tool to check that the network number is used only once. Also, check that the unit address under HLK* entry under Unit ID in the /etc/FgwQnx/FgwQnx.ini file is not being used by another unit.
0022	WARNING	**[HLK*] warning :TimeOut value (%s)**		
			Meaning	The timeout setting (indicated by %s in the syslog message) is wrong.
			Cause	Same as above.
			Correction	Use the Setting Tool to correct the timeout setting.
0023	WARNING	**[HLK*] warning : Retry count (%s)**		
			Meaning	The number of retries setting (indicated by %s in the syslog message) is wrong.
			Cause	Same as above.
			Correction	Use the Setting Tool to correct the retries setting.
0024	WARNING	**[HLK*] warning : receive timeout**		
			Meaning	A reception timed out.
			Cause 1	Communications could not be established.
			Correction 1	Check the communications settings.
			Cause 2	The connected device did not respond.
			Correction 2	Check the connected device to be sure it can respond.
0026	WARNING	**[HLK*] warning : receive signal**		
			Meaning	An end signal was received.
			Cause	The program was stopped by another error.
			Correction	Correct the errors for other error IDs and restart the Controller.
0027	WARNING	**[HLK*] warning : No node infomation.**		
			Meaning	Node information is not set in /etc/FgwQnx/HlkNetTbl.ini.
			Cause	Same as above.
			Correction	Check the contents of HlkNetTbl.
0028	WARNING	**[HLK*] warning : differnt protocol [%s]**		
			Meaning	The protocols set in the HlkNetTbl are different to the actual device.
			Cause	Same as above.
			Correction	Use the same protocol as the communications partner.

0030	WARNING	**[HLK*] warning : receive different response frame.**		
			Meaning	An illegal response frame was received.
			Cause	Same as above.
			Correction	Check the timeout time setting.
0031	WARNING	**[HLK*] warning : toFinsNode address(line:%d)**		
			Meaning	The node address set to the line (counted from 0) under HLK* in the /etc/FgwQnx/HlkNetTbl.ini file, indicated by %d in the syslog message, is wrong.
			Cause	Same as above.
			Correction	Check the contents of HlkNetTbl.
0032	WARNING	**[HLK*] warning : SpecSize don't convert to numeric(line:%d)**		
			Meaning	The value set the line under HLK* in /etc/FgwQnx/HlkNetTbl.ini, indicated by %d in the syslog message, is wrong. (The value indicates the Host Link Unit number when the connected device is a PLC, the Unit number for Compoway and ID Controllers, and the station number for Power Monitors.)
			Cause	Same as above.
			Correction	Check the contents of HlkNetTbl.
0033	WARNING	**[HLK*] warning : Protocol type don't defined. (line:%d)**		
			Meaning	The protocol setting for the line (counted from 0) under HLK* in /etc/FgwQnx/HlkNetTbl.ini, indicated by %d in the syslog message, is wrong.
			Cause	Same as above.
			Correction	Use the Setting Tool to set the correct protocol in the HlkNetTbl for the corresponding HLK Unit.
0034	WARNING	**[HLK*] warning : FinsNode address already used (NodeID = %d)**		
			Meaning	The same node number is set twice under HLK* in /etc/FgwQnx/HlkNetTbl.ini. (%d in the syslog message indicates the duplicated node number.)
			Cause	Same as above.
			Correction	Use the Setting Tool to change the duplicated node address in the HlkNetTbl for the corresponding HLK Unit.
0063	WARNING	**[HLK*] warning : Retry count over**		
			Meaning	The number of retries setting has been exceeded.
			Cause 1	Communications could not be established.
			Correction 1	Check the communications settings.
			Cause 2	The connected device did not respond.
			Correction 2	Check the connected device to be sure it can respond.
0064	ERROR	**[HLK*] error : Fins_changeNetworkProvider failed.**		
			Meaning	The network provider could not be registered.
			Cause	The network number or unit address is already in use.
			Correction	Use the Setting Tool to check that the network number is used only once. Also, check that the unit address under HLK* entry under Unit ID in the /etc/FgwQnx/FgwQnx.ini file is not being used by another unit.
0065	ERROR	**[HLK*] error : Fgw_setPriority failed.**		
			Meaning	Priority could not be set.
			Cause	The priority settings are wrong.
			Correction 1	Check that HLK*=23 is set under Priority in the /etc/FgwQnx/FgwQnx.ini file.
			Correction 2	Log in as root.

0066	ERROR	**[HLK*] error : Fgw_setScheduleType failed.**		
			Meaning	The schedule could not be set.
			Cause	The schedule settings are wrong.
			Correction	Check that HLK*=OTHER is set under Schedule in the /etc/FgwQnx/FgwQnx.ini file.
0067	ERROR	**[HLK*] error : IRQ is not setting.**		
			Meaning	The IRQ setting for the COM port allocated to HLK* is wrong.
			Cause	Same as above.
			Correction	Set the correct IRQ under COM* in the /etc/FgwQnx/FgwQnx.ini file. The default settings are shown below. _[COM1]_IRQ=4 _[COM2]_IRQ=3 _[COM3]_IRQ=5 _[COM4]_IRQ=7
0068	ERROR	**[HLK*] error : Device is not setting.**		
			Meaning	The device setting for the COM port allocated to HLK* is wrong.
			Cause	Same as above.
			Correction	Set the correct device setting under COM* of the /etc/FgwQnx/FgwQnx.ini file. The default settings are shown below. _[COM1]_Device=/Dev/ser1 _[COM2]_Device=/Dev/ser2 _[COM3]_Device=/Dev/ser3 _[COM4]_Device=/Dev/ser4_

RUT_UNIT (FGW-RUT)

Note: The star (*) at the start of the syslog message (RUT*) is replaced by a value to indicate RUT0 to RUT2.

ID	Level	syslog message		
0001	ERROR	**[RUT*] error: Unit couldn't start.(%s)**		
			Meaning	The argument that starts the process is wrong.
			Cause	The settings file may be corrupted.
			Correction	Return to the default Controller settings (Turn ON pin 4 on SW2.)
0002	ERROR	**[RUT*] error: Unit couldn't start.**		
			Meaning	And error occurred during process startup.
			Cause	There may be insufficient resources.
			Correction	Restart the Controller.
0003	ERROR	**[RUT*] error: Spawn failed.**		
			Meaning	Driver process startup error.
			Cause	The driver may already be started.
			Correction	Restart the Controller.
0004	ERROR	**[RUT*] error: signal received.**		
			Meaning	A kill signal was received.
			Cause	The process was stopped by another error or an error occurred while repeating.
			Correction	If the message is output other than for a repeat, correct the errors for other error IDs.
0005	ERROR	**[RUT*] error: my NodeID.(%s)**		
			Meaning	The RUT* node number (indicated by %s in the syslog message) is wrong.
			Cause	Same as above.
			Correction	Use the Setting Tool to set the correct RUT* node number.

0006	ERROR	**[RUT*] error: my UnitID.(%s)**		
			Meaning	The RUT* Unit number (indicated by %s in the syslog message) is wrong.
			Cause	Same as above.
			Correction	Set the RUT* entry under Unit ID in the /etc/FgwQnx/FgwQnx.ini file to between 16 and 31.
0007	ERROR	**[RUT*] error: FgwQnxRut.ini doesn't exist or doesn't open.**		
			Meaning	/etc/FgwQnx/FgwQnxRut.ini cannot be opened.
			Cause	The settings file cannot be found or the file could not be opened.
			Correction	Return to the default Controller settings. (Turn ON pin 4 on SW2.)
0008	ERROR	**[RUT*] error: COM configutration error.**		
			Meaning	The serial settings are wrong.
			Cause	The settings file may be corrupted.
			Correction	Return to the default Controller settings. (Turn ON pin 4 on SW2.)
0009	WARNING	**[RUT*] warning: receive message from unknown process.**		
			Meaning	A message was received from another process.
			Cause	_
			Correction	No corrective measure is required.
0010	WARNING	**[RUT*] warning: receive different command frame.**		
			Meaning	The FINS command is wrong.
			Cause	Same as above.
			Correction	Check the FINS command.
0011	WARNING	**[RUT*] warning: receive data overflow.**		
			Meaning	The receive data has overflowed.
			Cause	More than 2,016 data items were received.
			Correction	Check the receive data size.

Memory Card (CARD)

ID	Level	syslog message		
0106	ERROR	**no support device.**		
			Meaning	The mounted memory card is not supported.
			Cause	An unsupported memory card has been mounted.
			Correction	Mount a memory card that is supported.

PR (Other Processes)

ID	Level	syslog message		
0106	ERROR	**No Disk Space(%s) Free Size=%.0f**		
			Meaning	The free disk space indicated by %s in the syslog message is insufficient.
			Cause	The volume of files saved to the internal disk (/) for memory card (/hd) has increased.
			Correction	End the file saving process, save or backup the files, and then make some free disk space.
0601	ERROR	**battery low**		
			Meaning	The battery voltage has dropped.
			Cause	The battery connector is disconnected or the battery voltage has dropped.
			Correction	Check that the battery is connected correctly and replace the battery, if necessary.

7-2 DeviceNet Indicator Displays

The following table lists the the indictor displays that appear for DeviceNet displays, along with the steps required to correct the error.

Error	Indicator status		Possible correction
	MS	NS	
RAM error	Lit red.	Not lit.	Replace the Board.
EEPROM error	Lit red.	Not lit.	Replace the Board.
MAC ID duplication	Any (Green)	Lit red.	Check the MAC IDs for other nodes and be sure the same MAC ID is used only once. Restart the Controller after correcting the settings.
BusOFF detected	Any (Green)	Lit red.	Turn OFF the power, check the following, and then try turning the power back ON. Device baud rate settings, cable integrity, cable connections, cable lengths for main and branch lines, terminating resistance settings, and noise.
Network power error	Any (Green)	Not lit.	Turn OFF the power, check the following, and then try turning the power back ON. Network power supply and network cables.
Send timeout	Any (Green)	Not lit.	Turn OFF the power, check the following, and then try turning the power back ON. Device baud rate settings, cable integrity, cable connections, cable lengths for main and branch lines, terminating resistance settings, and noise. If the problem persists even when all of the above are correct, replace the Board (CAN controller error).
Slave missing	Any (Green)	Flashing red.	Turn OFF the power, check the following, and then try turning the power back ON. Device baud rate settings, cable integrity, cable connections, cable lengths for main and branch lines, terminating resistance settings, and noise. If the problem persists even when all of the above are correct, replace the Board (CAN controller error).
Slave I/O size mismatch	Any (Green)	Flashing red.	Check all of the slaves and make sure the slave settings in the scan list are correct.
Communications error	Any (Green)	Flashing red.	Turn OFF the power, check the following, and then try turning the power back ON. Device baud rate settings, cable integrity, cable connections, cable lengths for main and branch lines, terminating resistance settings, and noise. If the problem persists even when all of the above are correct, replace the Board (CAN controller error).
Communications stopped	Any (Green)	Any	Turn OFF the power, correct the cause of communications stopping, and then try turning the power back ON.
System error	Lit red.	Not lit.	Replace the Board.

7-2-1 Seven-segment Display

The 7-segment display will show the node address for the Master Unit in hexadecimal (00 to 3F) during normal operations. When an error occurs, the 7-segment display will alternate between showing the error code and the node address where the error occurred.

The dot indicator on the left at the bottom right of the 7-segment display shows whether the registered scan list is enabled or disabled. The dot indicator on the right shows whether the slave function is operating or stopped.

Note Turn OFF pin 2 and turn ON pin 3 on DIP switch SW2 for the 7-segment indicator to alternately display the error code and the error source node address. Refer to *3-2 DIP Switch Settings* for details.

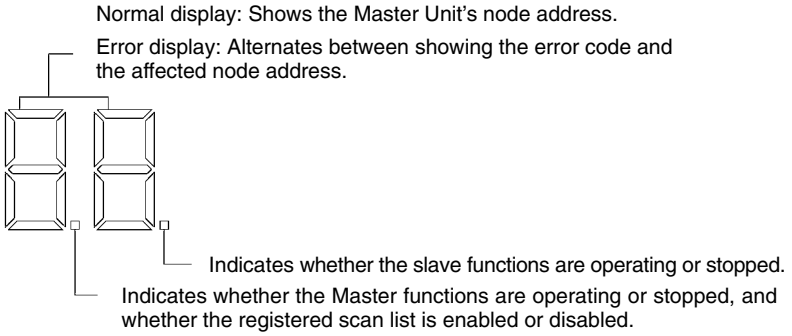

Left and Right Dot Indicators

Dot indicator	Details	Display and status
Left side	Scan list enabled/disabled/Master functions stopped	Lit: Master functions stopped Flashing: Scan list disabled Not lit: Scan list enabled or Master functions disabled.
Right side	Slave functions operating/stopped	Lit: Slave functions stopped Not lit: Slave functions operating

The 7-segment indicator displays for DeviceNet errors and the possible user actions are shown in the following tables.

MS indicators	NS indicators	7-segment indicator (alternates with Unit node address display)	Error items	Possible corrections
_	_	A0	Remote I/O communications stopped by a remote I/O communications error	Refer to the possible corrections for the following errors. _ Remote I/O communications error (d9) _ Network power supply error (E0) _ Send timeout (E2)
_	_	C0	CPU Unit error	Restart the Controller.
_	_	C2	Unit error	After 30 seconds, the C2 indicator will automatically turn OFF.
_	_	C4	Configuration error	Remove the cause of the configuration error (refer to d0 to d2), check that the error no longer occurs, and re-register the scan list.
_	_	C5	Settings failure	Check the set parameter and restart the Controller.
_	_	C6	Multiple switches ON	Re-execute the soft switch operations one at a time.
_	Flashing red.	d0	Configuration error (I/O area duplication)	Set the slave node addresses again.
_	Flashing red.	d1	Configuration error (I/O area exceeded)	Set the slave node addresses again.
_	Flashing red.	d2	Configuration error (unsupported slave)	Use a slave with output or input size of 200 bytes.
_	Flashing red.	d5	Verification error (no slave)	Check the following possible causes. _ Mismatched Master and slave baud rates. _ Incorrect cable length for main and branch lines. _ Cable disconnected. _ Cable integrity. _ Terminating resistance on both ends of main line. _ Too much noise.
_	Flashing red.	d6	Verification error (invalid vendor)	Check the slave then recreate the scan list.
_	Flashing red.	d6	Verification error (invalid connection path)	Check the slave then recreate the scan list.
_	Flashing red.	d6	Verification error (slave I/O size mismatch)	Check the slave then recreate the scan list.
_	Flashing red.	d6	Verification error (wrong device type)	Check the slave then recreate the scan list.
_	Flashing red.	d6	Verification error (wrong product code)	Check the slave then recreate the scan list.

MS indicators	NS indicators	7-segment indicator (alternates with Unit node address display)	Error items	Possible corrections
_	Flashing red.	d6	Verification error (connection not supported)	Check the slave then recreate the scan list.
_	Flashing red.	d9	Remote I/O communications error	Check the following possible causes. _ Mismatched Master and slave baud rates. _ Incorrect cable length for main and branch lines. _ Cable disconnected. _ Cable integrity. _ Terminating resistance on both ends of main line. _ Too much noise.
_	Not lit or flashing red (See note.)	E0	Network power supply error	Check the network power supply and the network cable wiring.
_	Not lit or flashing red (See note.)	E2	Send timeout	Check the following possible causes. _ Mismatched Master and slave baud rates. _ Incorrect cable length for main and branch lines. _ Cable disconnected. _ Cable integrity. _ Terminating resistance on both ends of main line. _ Too much noise.
Flashing red.	_	E6	Message monitor timer list logical error	Use the Configurator to re-register the message monitor timer.
Flashing red.	_	E7	Slave scan list logical error	Use the Configurator to set the slave scan list again.
Flashing red.	_	E8	Master scan list logical error	Clear the scan list and then register it again. Alternatively, use the Configurator to set the master scan list again.
Flashing red.	_	E9	Memory access error	If the memory access error occurs again, replace the DeviceNet Board.
_	Lit red.	F0	Node address duplicated	Check the node addresses of other nodes. Change the addresses so that the same node address is not used more than once, then restart the Controller.
_	Lit red.	F1	BusOFF detected	Check the following possible causes. _ Mismatched Master and slave baud rates. _ Incorrect cable length for main and branch lines. _ Cable disconnected. _ Cable integrity. _ Terminating resistance on both ends of main line. _ Too much noise.

Note: Flashing red If the error occurs during remote I/O communications. Not lit If the error occurs at other times.

MS indicators	NS indicators	7-segment indicator (alternates with Unit node address display)	Error items	Possible corrections
Flashing red.	Not lit.	H1	Unit number duplicated	Set the correct Unit number and restart the Controller.
Flashing red.	Not lit.	H2	Controller failure	Restart the Controller. If the error still occurs, replace the Controller.
Lit red.	Not lit.	H3	DeviceNet Unit failure	If the error occurs again, replace the DeviceNet Board.
Flashing red.	Not lit.	H4	Node address setting error	Set the correct node address and restart the Controller.
Flashing red.	Not lit.	H5	Baud rate setting error	Set the correct baud rate and restart the Controller.
Flashing red.	Not lit.	H6	Controller failure	Restart the Controller. If the error still occurs, replace the Controller.
Flashing red.	Not lit.	H7	I/O table not registered	_
Flashing red.	_	HA	Controller memory failure	Restart the Controller. If the error still occurs, replace the Controller.
Flashing red.	_	Hb	CPU Unit failure	Restart the Controller. If the error still occurs, replace the Controller.
Flashing red.	_	HC	Routing table logical error	Restart the Controller.
Flashing red.	_	Hd	I/O refresh error	Check the master and slave scan lists and set again using the correct allocations.
Flashing red.	_	HE	Service monitor error	Review the Controller operating environment.
Flashing red.	_	HF	WDT error	Replace the Controller.
_	Flashing red.	L9	Remote I/O communications error	Check the following possible causes. _ Master not operating correctly. _ Mismatched Master and slave baud rates. _ Incorrect cable length for main and branch lines. _ Cable disconnected. _ Cable integrity. _ Terminating resistance on both ends of main line. _ Too much noise.
Lit red.	Not lit.	Not lit.	Special I/O Unit error	Restart the Controller. If the error occurs again, replace the DeviceNet Board.

7-3 Error Messages with the ITNC-EIS01-CST or ITNC-EIX01-CST

7-3-1 Overview

The ITNC-EIS01-CST and ITNC-EIX01-CST have the following two types of error logs.

- A log that is saved in the SYSLOG. Error messages are displayed on the 7-segment display.
- A log that is saved as a CPU Bus Unit error log in the CS1 Bus Interface Board. The errors are read by the CPU Bus Unit with FINS commands. Refer to *6-5 FINS Commands* for details.

This section provides information on error messages displayed on the 7-segment display and saved in the syslog.

7-3-2 Error Messages

The following table lists error messages unique to the ITNC-EIS01-CST and ITNC-EIX01-CST.

Each error message of the BUSCS1_UNIT has the suffix “bU” when it is displayed on the 7-segment display and has the suffix “FGW-BUSCS1” in the SYSLOG.

Refer to *7-1 Error Messages* for information on how the error messages appear on the 7-segment display or in the SYSLOG and for error messages common to all Open Network Controllers.

BUSCS1_UNIT (FGW- BUSCS1)

ID	Level	syslog message		
0001	ERROR	**Fins_new Failed.**		
			Meaning	The network provider could not be registered.
			Cause	The network number or unit address is already in use.
			Correction	Use the Setting Tool to check that the network number is used only once. Also, check that the unit address under BUSCS1 entry under Unit ID in the /etc/FgwQnx/FgwQnx.ini file is not being used by another unit.
0002	ERROR	**Fins_changeNetwork Provider Failed.**		
			Meaning	The network provider could not be registered.
			Cause	The network number or unit address is already in use.
			Correction	Use the Setting Tool to check that the network number is used only once. Also, check that the unit address under BUSCS1 entry under Unit ID in the /etc/FgwQnx/FgwQnx.ini file is not being used by another unit.
0003	ERROR	**Profile Error. UnitID = [%d].**		
			Meaning	The BUSCS1 Unit number (indicated by %d in the syslog message) is wrong.
			Cause	Same as above.
			Correction	Check that the BUSCS1 entry is set between 16 and 31 under Unit ID in the /etc/FgwQnx/FgwQnx.ini file.

ID	Level	syslog message		
0004	ERROR	**Profile Error. NodeIDONC = [%d].**		
			Meaning	The node number of the Open Network Controller (indicated by %d in the syslog message) is wrong.
			Cause	Same as above.
			Correction	Use the Setting Tool to set a number between 1 and 254 that is not being used by the CS1 Unit node.
0005	ERROR	**Profile Error. NodeIDCS1 = [%d].**		
			Meaning	The node number of the CS1 Unit (indicated by %d in the syslog message) is wrong.
			Cause	Same as above.
			Correction	Use the Setting Tool to set a number between 1 and 254 that is not being used by the Open Network Controller node.
0007	ERROR	**qnx_name_locate (receiver) Failed.**		
			Meaning	The registered process does not exist.
			Cause	The process could not be registered.
			Correction	Check the process name set in the /etc/FgwQnx/FgwQnxBUSCS1.ini file.
0008	ERROR	**Can't duplicate Fins Handle (sender).**		
			Meaning	The network provider could not be registered.
			Cause	The network number or unit address is already in use.
			Correction	Use the Setting Tool to check that the network number is used only once. Also, check that the unit address under BUSCS1 entry under Unit ID in the /etc/FgwQnx/FgwQnx.ini file is not being used by another unit.
0010	WARNING	**Receive from other process.**		
			Meaning	The message was received from the wrong process.
			Cause	Same as above.
			Correction	Check the setting.
0011	WARNING	**Fins Command Error Command = [%x%x].**		
			Meaning	The wrong FINS command was received. (The wrong FINS command code is indicated by %x%x in the syslog message.)
			Cause	Same as above.
			Correction	Check the FINS command transmitted.
0012	ERROR	**Not exist driver process.**		
			Meaning	The driver process does not exist.
			Cause	The driver process did not start.
			Correction	Check the /etc/FgwQnx/FgwQnxBUSCS1.ini file settings.
0013	ERROR	**FgwProfile_setPriorityEx Failed.**		
			Meaning	The priority could not be set.
			Cause	The priority setting is wrong.
			Correction	Check that BUSCS1=23 is set under Priority in the /etc/FgwQnx/FgwQnx.ini file.
0014	ERROR	**FgwProfile_setSchedule Type Failed.**		
			Meaning	The schedule type could not be set.
			Cause	The schedule setting is wrong.
			Correction	Check that BUSCS1=OTHER is set under Schedule in the /etc/FgwQnx/FgwQnx.ini file.
0015	ERROR	**qnx_name_attach (receiver) Failed.**		
			Meaning	The process could not be registered.
			Cause	The process name could already be in use.
			Correction	Check the setting.

0016	ERROR	**qnx_name_attach (sender) Failed.**		
			Meaning	The process could not be registered.
			Cause	The process name could already be in use.
			Correction	Check the setting.
0017	ERROR	**Can't execute Driver process = %s.**		
			Meaning	The driver process could not start.
			Cause	Same as above.
			Correction	Check the setting.
0018	ERROR	**Can't fork process.**		
			Meaning	The process could not be registered.
			Cause	The resource may be insufficient.
			Correction	Check the user application.
0019	WARNING	**Get Kill Signal.**		
			Meaning	An end signal was received.
			Cause	The program was stopped by another process.
			Correction	Check the setting.
0020	WARNING	**Routing Table Error.**		
			Meaning	The routing table setting is wrong.
			Cause	Same as above.
			Correction	Check the setting.
0021	WARNING	**Illegal response received.**		
			Meaning	The wrong response was received.
			Cause	Same as above.
			Correction	Check the setting.
0022	WARNING	**Setted Node doesn't exist in my network.**		
			Meaning	The specified node did not exist in the network.
			Cause	Same as above.
			Correction	Check the node address of the destination.
0031	ERROR	**EventMemory buffered failure [%s]**		
			Meaning	The event memory (%s) for the specified size could not be secured.
			Cause	The transfer size of FgwQnxBUSCS1Map.ini is too large.
			Correction	Change the transfer size.
0032	ERROR	**Cyclic timer attach failure**		
			Meaning	The cyclic timer could not be attached.
			Cause	The timer is used by another program.
			Correction	Check the user application.
0033	ERROR	**Cyclic timer creat failure**		
			Meaning	The cyclic timer could not be created.
			Cause	The timer is used by another program.
			Correction	Check the user application.
0034	ERROR	**Refresh timer attach failure**		
			Meaning	The refresh timer could not be attached.
			Cause	The timer is used by another program.
			Correction	Check the user application.

0035	ERROR	**Refresh timer creat failure**		
			Meaning	The refresh timer could not be created.
			Cause	The timer is used by another program.
			Correction	Check the user application.
0036	ERROR	**Irq proxy attach failure**		
			Meaning	The interrupt proxy could not be attached.
			Cause	The proxy is used by another application.
			Correction	Check the user application.
0037	ERROR	**Irq handler attach failure**		
			Meaning	The interrupt proxy could not be attached.
			Cause	The proxy is used by another application.
			Correction	Check the user application.
0038	ERROR	**Board initial : UNR2 failure [0x %x]**		
			Meaning	The initialization of the CS1 bus failed because the Unit number is already in use.
			Cause	The Unit number is already used by another CPU BUS Unit.
			Correction	Change the rotary switch setting. If the error occurs again, replace the Board.
0039	ERROR	**Board initial:UNR2 recognition failure**		
			Meaning	The Unit was recognized as a Special I/O Unit.
			Cause	The hardware has an error.
			Correction	Change or check the cable.
0040	ERROR	**Board initial:Memory test error [0x %x]**		
			Meaning	A shared memory check error resulted.
			Cause	The hardware has an error.
			Correction	_
0041	ERROR	**Board initial:Memory test error [0x %x]**		
			Meaning	A shared memory check error resulted.
			Cause	The hardware has an error.
			Correction	_
0042	ERROR	**Board initial:Cyclic timeout**		
			Meaning	An initialization time-out error resulted.
			Cause	The access right has not been released by another CPU Bus Unit.
			Correction	Check the operation with the other CPU Bus Units disconnected from the network.
0043	ERROR	**Board initial:IO table error**		
			Meaning	The I/O tables were not registered.
			Cause	Same as above.
			Correction	Create the I/O tables.
0044	WARNING	**Board initial:Clock initial failure [%d]**		
			Meaning	The clock initialization failed.
			Cause	The CS1's built-in clock is wrong.
			Correction	Set the correct time.
0045	WARNING	**Board initial : Route table read FINS failure 0 [%x][%x]**		
			Meaning	The routing tables could not be read.
			Cause	The CS1 has no routing tables.
			Correction	Set the routing tables.

0046	WARNING	**Board initial: Route table my networks over 16 [%d]**		
			Meaning	The number of local networks was 17 or over.
			Cause	The CS1's routing tables are wrong.
			Correction	Set the correct routing tables.
0047	WARNING	**Board initial: Route table relay networks over 20 [%d]**		
			Meaning	The number of relay networks was 21 or over.
			Cause	The CS1's routing tables are wrong.
			Correction	Set the correct routing tables.
0048	WARNING	**Board initial: Route table my net is 0 but relay net is [%d]**		
			Meaning	The number of local networks is 0.
			Cause	The CS1's routing tables are wrong.
			Correction	Set the correct routing tables.
0049	WARNING	**Board initial: Route table no my net or too many my nets [%d]**		
			Meaning	More than one local network was registered.
			Cause	The CS1's routing tables are wrong.
			Correction	Set the correct routing tables.
0050	WARNING	**Board initial: Route table my Unit is in hub net**		
			Meaning	The local Unit is in a hub network.
			Cause	The CS1's routing tables are wrong.
			Correction	Set the correct routing tables.
0051	WARNING	**Cyclic write parameter error [0x%x0x%x]**		
			Meaning	The cyclic write parameter is wrong.
			Cause	The map file parameter has an error.
			Correction	Check the CS1's offset and be sure the mapping settings are correct.
0052	WARNING	**Cyclic read parameter error [0x%x0x%x]**		
			Meaning	The cyclic read parameter is wrong.
			Cause	The map file parameter has an error.
			Correction	Check the CS1's address and be sure the mapping settings are correct.
0053	WARNING	**Fins header error (receive response from Net to UNIT)**		
			Meaning	The FINS response received was addressed to the local unit.
			Cause	The FINS response was illegal.
			Correction	Discarded (no problem.)
0054	WARNING	**Fins route failure (from PLC)**		
			Meaning	The CS1 Unit has a routing error.
			Cause	A routing error occurred in the CS1 PLC.
			Correction	Read the error with FINS2102, check the error log, and set the routing tables correctly.
0055	WARNING	**Fins header error (receive response from PLC to UNIT**		
			Meaning	The response received was already routed.
			Cause	The FINS response was illegal.
			Correction	Discarded (no problem.)
0056	WARNING	**Illegal Fins destination NodeID**		
			Meaning	The destination node was not found.
			Cause	The BUSCS1's node does not exist.
			Correction	Check the node ID.

0057	ERROR	**EEPROM write(profile) failure**		
			Meaning	An EEPROM write failure occurred.
			Cause	The hardware has an error.
			Correction	
0058	WARNING	**Illegal mode. Can't write profile**		
			Meaning	The mode is not profile write mode.
			Cause	The mode setting was illegal.
			Correction	The user cannot overwrite the profile.
0059	ERROR	**EEPROM write(errlog) failure**		
			Meaning	An EEPROM write failure occurred.
			Cause	The hardware has an error.
			Correction	
0060	ERROR	**EEPROM write(errlog read) failure**		
			Meaning	An EEPROM write failure occurred.
			Cause	The hardware has an error.
			Correction	
0061	WARNING	**Map file open failure [%s]**		
			Meaning	The map file could not be opened.
			Cause	FgwQnxBUSCS1Map.ini does not exist.
			Correction	Clear all mapping settings and create FgwQnxBUSCS1Map.ini.
0062	WARNING	**Map file read failure [%s]**		
			Meaning	A map file format error occurred.
			Cause	The map file format is illegal.
			Correction	Clear all mapping settings and create FgwQnxBUSCS1Map.ini.
0063	WARNING	**Map:myline error [%d] (set 1 to 128)**		
			Meaning	The first parameter is not within range.
			Cause	The range is wrong.
			Correction	Clear all mapping settings and create FgwQnxBUSCS1Map.ini.
0064	WARNING	**Illegal parameter: No available lines**		
			Meaning	The map file has no valid lines.
			Cause	There is no valid I/O communications setting.
			Correction	Set the parameter range correctly if mapping is required.
0065	ERROR	**Illegal parameter:MyLine [%d] (set 1 to 128)**		
			Meaning	The parameter MyLine is not within range.
			Cause	The range is wrong.
			Correction	Clear all mapping settings and create FgwQnxBUSCS1Map.ini.
0066	ERROR	**Shm open error [%d]**		
			Meaning	The shared memory is not available.
			Cause	The shared memory is used up by another program.
			Correction	Check the user application.
0067	ERROR	**mmap failure [%d]**		
			Meaning	The shared memory is not available.
			Cause	The shared memory is used up by another program.
			Correction	Check the user application.

0068	WARNING	**Cyclic parameter size sum overrange.**		
			Meaning	The number of transfer words exceeded 7,784.
			Cause	The range is wrong.
			Correction	Check the mapping parameter range.
0069	WARNING	**No Route table in CS1**		
			Meaning	The CS1 Unit has no routing tables.
			Cause	Same as above.
			Correction	Set the routing tables.
0070	WARNING	**Response size over at [%d]**		
			Meaning	The CS1 bus FINS size was exceeded.
			Cause	The FINS size exceeded 2,000 bytes.
			Correction	The packet will be discarded.
0070	WARNING	**Response size over at [%d]**		
			Meaning	The CS1 bus FINS size was exceeded.
			Cause	The FINS size exceeded 2,000 bytes.
			Correction	The packet will be discarded.
0071	ERROR	**Illegal Parameter:Ticksize [%d](set under 10000)**		
			Meaning	The FgwQnx.ini's Ticksize exceeded 10,000.
			Cause	The range is wrong.
			Correction	Check the range for the TickSize entry under TickSize in the /etc/FgwQnx/FgwQnx.ini file.
0072	ERROR	**Illegal Parameter: ONC UnitID [%d](set between 1 and 240)**		
			Meaning	The BUSCS1 Unit number (indicated by %d in the syslog message) is not within range.
			Cause	Same as above.
			Correction	Set the BUSCS1 entry under Unit ID in the /etc/FgwQnx/FgwQnx.ini to between 16 and 31.
0073	ERROR	**Illegal Parameter: ONC NodeID [%d](set between 1 and 254)**		
			Meaning	The ONC node number (indicated by %d in the syslog message) is not within range.
			Cause	Same as above.
			Correction	Use the Setting Tool to set the ONC node number correctly.
0074	ERROR	**Illegal Parameter: CS1 NodeID [%d](set between 1 and 254)**		
			Meaning	The CS1 node number (indicated by %d in the syslog message) is already in use or not within range.
			Cause	The range is wrong.
			Correction	Use the Setting Tool to set the CS1 node number correctly.
0075	ERROR	**Illegal Parameter: IRQ [%d](set 12 or 15)**		
			Meaning	The IRQ entry under BUSCS1 in the /etc/FgwQnx/FgwQnxBUSCS1.ini file (indicated by %d in the syslog message) is not within range.
			Cause	Same as above.
			Correction	Set the IRQ entry under BUSCS1 in the /etc/FgwQnx/FgwQnxBUSCS1.ini file to between 12 and 15.
0076	ERROR	**Illegal Parameter: Memaddr [0x%x]**		
			Meaning	The memory address under BUSCS1 in the /etc/FgwQnx/FgwQnxBUSCS1.ini file is not within range.
			Cause	Same as above.
			Correction	Return to the default Controller settings. (Turn ON pin 4 on SW2.)
0077	ERROR	**Illegal Parameter: IOaddr [0x%x]**		
			Meaning	The I/O address under BUSCS1 in the /etc/FgwQnx/FgwQnxBUSCS1.ini file is not within range.
			Cause	Same as above.
			Correction	Return to the default Controller settings. (Turn ON pin 4 on SW2.)

0078	WARNING	**Illegal Parameter: RefreshMethod [%d](set 0 or 1)**		
			Meaning	The parameter refresh method under BUSCS1 in the /etc/FgwQnx/FgwQnxBUSCS1.ini file is not within range.
			Cause	Same as above.
			Correction	Set the parameter refresh method under BUSCS1 in the /etc/FgwQnx/FgwQnxBUSCS1.ini file to 0 or 1.
0079	WARNING	**Illegal Parameter: RefreshTimer [%d](set 1 to 65535)**		
			Meaning	The refresh cycle is not within range.
			Cause	Same as above.
			Correction	Use the Setting Tool to set the refresh cycle to between 1 and 9,999.
0080	WARNING	**Illegal Parameter: ResetMethod [%d](set 0 or 1)**		
			Meaning	The reset method is wrong.
			Cause	Same as above.
			Correction	Use the Setting Tool to set the reset correctly.
0081	WARNING	**Illegal Parameter: SyncClock [%d](set 0 or 1)**		
			Meaning	The sync clock setting is wrong.
			Cause	Same as above.
			Correction	Use the Setting Tool to set the sync clock correctly.
0082	ERROR	**Set Priority failure**		
			Meaning	A priority error occurred.
			Cause	The range is wrong.
			Correction	Check that BUSCS1=23 is set under Priority in the /etc/FgwQnx/FgwQnx.ini file.
0083	ERROR	**Set Schedule type failure**		
			Meaning	A scheduling error occurred.
			Cause	The range is wrong.
			Correction	Check that BUSCS1=OTHER is set under Schedule in the /etc/FgwQnx/FgwQnx.ini file.
0084	ERROR	**Hardware initial failure**		
			Meaning	The CS1 bus was not initialized.
			Cause	Same as above.
			Correction	Check other error log items.
0085	ERROR	**Cyclic interrupt timed out**		
			Meaning	A cyclic interrupt time-out resulted.
			Cause	The access right has not been released by another CPU Bus Unit.
			Correction	Check the operation with other CPU Bus Units disconnected from the network.
0086	ERROR	**Cable connection error**		
			Meaning	The bus connection cable was disconnected.
			Cause	Same as above.
			Correction	Connect the bus connection cable correctly and restart the Unit and the CS1.
0087	ERROR	**PLC power failure**		
			Meaning	The CS1 had a power failure.
			Cause	Same as above.
			Correction	Restore the power and restart the Unit and the CS1.
0088	ERROR	**PLC WDT error**		
			Meaning	The CS1 had a watchdog timeout error.
			Cause	Same as above.
			Correction	Eliminate the cause of the problem and restart the Unit and the CS1.

0089	ERROR	**PLC Bus error**		
			Meaning	The CS1 bus error resulted.
			Cause	Same as above.
			Correction	Eliminate the cause of the problem and restart the Unit and the CS1.
0090	WARNING	**Cyclic interrupt is back**		
			Meaning	The cyclic access right returned.
			Cause	Same as above.
			Correction	The error was restored.
0091	WARNING	**Illegal irq status [0x%x]**		
			Meaning	An illegal interrupt status resulted.
			Cause	An illegal interrupt status resulted due to noise.
			Correction	The interrupt status will not be processed.
0092	WARNING	**Illegal message [%d]**		
			Meaning	An illegal message was received.
			Cause	A meaningless message was received from another process.
			Correction	The message will be discarded.
0099	ERROR	**ACC2 failure**		
			Meaning	The cyclic access right was not acquired.
			Cause	The access right has not been released by another CPU Bus Unit.
			Correction	Check the operation with other CPU Bus Units disconnected from the network.
0100	WARNING	**EventMemory initial failure [%s]**		
			Meaning	The event memory indicated by %s in the syslog message could not be opened.
			Cause	The event memory is illegal.
			Correction	Check the event memory name.
0103	WARNING	**CS1 memory [%s] is not available**		
			Meaning	The CS1 memory name is illegal.
			Cause	Same as above.
			Correction	Check the CS1 memory name.
0104	WARNING	**Can’t get address line [%d]**		
			Meaning	The start address of the CS1 memory was not acquired.
			Cause	FgwQnxBUSCS1Map.ini is illegal.
			Correction	Clear all mapping settings and create FgwQnxBUSCS1Map.ini.
0105	WARNING	**Illegal Network CS1[%d] and Fgw[%d]**		
			Meaning	The CS1 routing tables and the Open Network Controller have different network numbers.
			Cause	The CS1 routing table and ONC BUSCS1 Unit network numbers are different.
			Correction	Use the same network number.
0106	WARNING	**Board initial: Route table Fins Timeout**		
			Meaning	A routing table read time-out error resulted.
			Cause	The FINS response did not return.
			Correction	Check the CS1’s routing tables.

Appendix A
Specifications

This appendix lists the specifications for the Open Network Controller.

General Specifications

Item	Specifications			
Model	ITNC-EIS01 ITNC-EIS01-CST	ITNC-EIS01-DRM	ITNC-EIX01 ITNC-EIX01-CST	ITNC-EIX01-DRM
Rated supply voltage	24 V DC			
Allowable voltage range	20.4 to 27.6 V DC			
Power consumption	15 W max.		20 W max.	
Insulation resistance	20 MΩ min. between all external DC terminals and ground terminal (at 100 V DC)			
Dialectic strength	Leakage current of 10 mA maximum at 500 V AC, 50/60 Hz, for one minute between all external DC terminals and ground terminal			
Noise immunity	1,500 V_{p-p} Pulse width: 0.1 to 1 μs Pulse rise time: 1 ns (via noise simulator)			
Vibration resistance	Conforms to JIS C0911: 10 to 57 Hz, 0.075-mm amplitude, 57 to 150 Hz, acceleration: 9.8 m/s^2 in X, Y, and Z directions for 80 minutes each (Time coefficient; 8 minutes × coefficient factor 10 = total time 80 minutes) (DIN Track mounting: 2 to 55 Hz, 2.94 m/s^2 for 20 minutes in X, Y, and Z directions)			
Shock resistance	Conforms to JIS C0912: 147 m/s^2, 3 times in X, Y, and Z directions			
Ambient temperature	Operating: 0 to 55 °C Storage: –20 to 75 °C (With battery removed)			
Ambient humidity	Operating: 10 to 90% RH (with no condensation)			
Ambient environment	No corrosive gases			
Ground	Ground to a resistance of 100 Ω or less.			
Structure	For mounting inside a panel			
Weight	0.6 kg max.	0.7 kg max.	0.9 kg max.	1.0 kg max.
Dimensions	204.4 × 110 × 42.4 mm (W×D×H)		234.4 × 136 × 62.4 mm (W×D×H)	
International standards	Conforms to UL, CSA, and EC directives.			

Performance Specifications

Item	Standard Models		Expansion Models	
	ITNC-EIS01	ITNC-EIS01-DRM (ITNC-EIS01-CST)	ITNC-EIX01	ITNC-EIX01-DRM (ITNC-EIX01-CST)
CPU	486-compatible CPU, 66 MHz, no FPU			
Memory	16 Mbytes			
Disk	Flash disk, 8 Mbytes			
Compact Flash Card Slot	Type 1, one slot			
Ethernet	10Base-T			
Serial ports	Two RS-232 ports		Two RS-232 ports, one RS-422A/485 port	
Field bus	None	DeviceNet (CS1 bus)	None	DeviceNet (CS1 bus)
OS	QNX 4.25			
ISA bus	None		1 slot	

Appendix B
Connector Signal Arrangements

This section provides the signal arrangements for each connector.

COM1 and COM2

From the side of the Open Network Controller

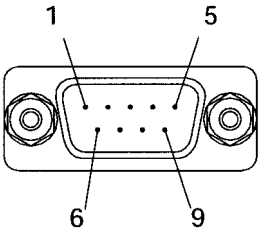

D-sub, 9-pin, male, #4-40UNC

Pin No.	Signal
1	CD
2	RD
3	SD
4	ER
5	SG
6	DR
7	RS
8	CS
9	CI

Recommended Cables for Terminal Connections (OMRON)

XW2Z-200V (D-sub, 9-pin, female, 2 m)
XW2Z-500V (D-sub, 9-pin, female, 5 m)

COM3

From the side of the Open Network Controller

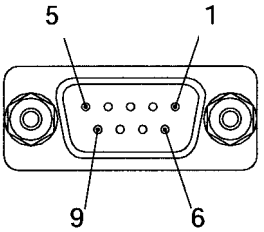

D-sub, 9-pin, female, M2.6

Pin No.	Signal
1	SDA (SD–)
2	SDB (SD+)
3	NC
4	NC
5	NC
6	RDA (RD–)
7	NC
8	RDB (RD+)
9	NC

Ethernet (10Base-t) Connector

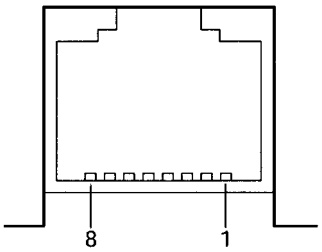

Pin No.	Signal
1	TD+
2	TD–
3	RD+
4	NC
5	NC
6	RD–
7	NC
8	NC

Note Connector model: RJ45

Power Supply Terminal Block

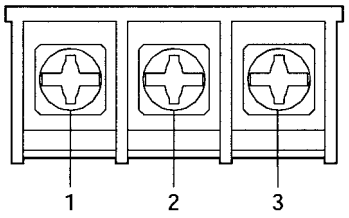

Pin No.	Signal
1	+24 V
2	0 V
3	Functional ground terminal

Appendix C
Replacing the Backup Battery

It is recommended that the backup battery for flash memory is replaced regularly to prevent battery errors.

Battery Life

The battery life is five years, regardless of whether power to the Controller is turned ON or OFF. The memory back-up time when the power is turned OFF is affected greatly by ambient temperature.

Battery life	Memory backup when power turned OFF	
	Guaranteed	Actual
5 years	20,000 hours (approx. 2 years 3 months)	43,000 hours (approx. 5 years)

Note Guaranteed time: Memory backup time at ambient temperature of 55 °C with power turned OFF.
Actual time: Memory backup time at ambient temperature of 25 °C with power turned OFF.

Battery Model

Replace the battery with a C500-BAT08 Battery Set.

Changing the Battery

The procedure for changing the battery is outlined below.

Note
1. Before replacing the battery, turn ON the power to the Open Network Controller for 5 minutes minimum.
2. Complete the battery replacement operation within two minutes. If the battery is not replaced within 2 minutes, the clock, settings, and internal memory data may be lost.
3. Always turn OFF the power before replacing the battery.

Procedure

1. Turn OFF the power to the Open Network Controller.
2. Open the battery cover.

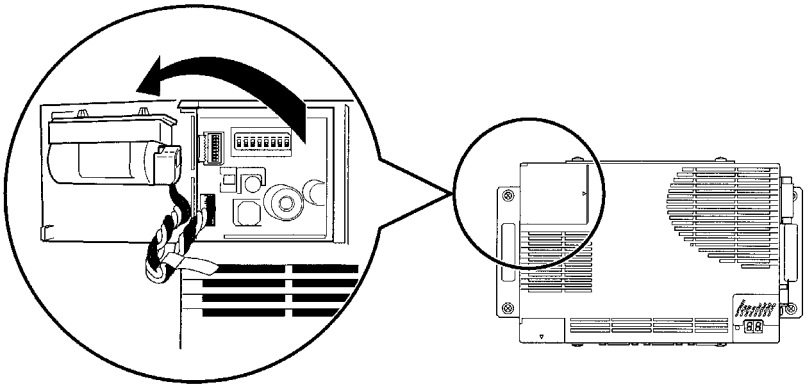

3. Remove the connector for the old battery.

4. Remove the old battery from the battery holder on the battery cover.

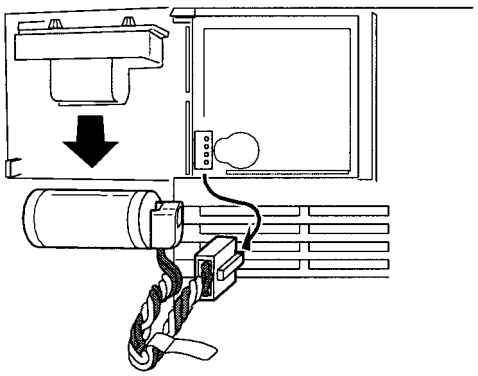

5. Insert the new battery into the battery holder.
6. Plug in the connector for the new battery.
7. Re-mount the battery cover on the Open Network Controller.

⚠ **Caution** Never perform any of the following operations on the battery. If any of the following operations are performed, the battery may ignite, erupt, or leak fluid.

- Never short the positive (+) and negative (–) terminals.
- Never recharge the battery.
- Never dismantle the battery.
- Never subject the battery to heat or incinerate it.
- Never subject the battery to excessive shock.

Never use any battery that has been dropped on the floor or oherwise subjected to excessive shock. Doing so may result in battery leakage.
Make sure that batteries are replaced by qualified technicians. Batteries must be replaced by qualified technicians to meet UL standards.

Appendix D
PT Connection Service

PT Connection Service

The PT connection service connects a Programmable Terminal (PT) to one or more COM ports on the Open Network Controller. The Open Network Controller then operates as a Host Link Unit for a virtual PLC and provides data memory (DM) and I/O memory (CIO) data to the PT.

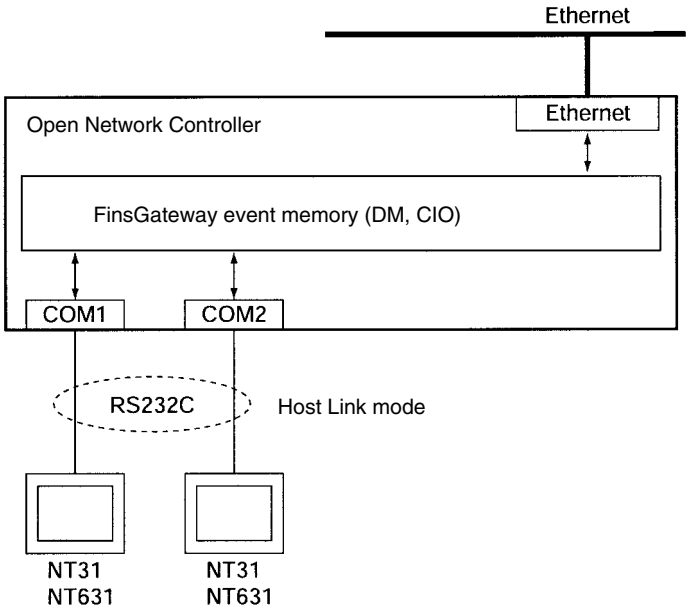

Connectable PTs

The following PTs be connected to the Open Network Controller.

NT31C-ST141(B): Color STN LCD Model

NT31C-ST121(B): Monochrome STN LCD Model

NT631C-ST141(B): Color TFT LCD Model

NT631C-ST151(B): Color STN LCD Model

NT631C-ST211(B): High-contrast EL Model

The Open Network Controller cannot be used for PTs other than those listed above. Communications are possible in Host Link Mode only.

Memory Areas Used for PTs

The DM and CIO areas can be used for PTs. A communications error will occur if any other memory area (such as TIM or AR) is used. The capacities of the memory areas used are set in the FinsGateway QNX settings file (/etc/FgwQnx/FgwQnx.ini).

Connecting Cables

Connect the COM1 or COM2 port on the Open Network Controller to port A on the PT, as shown in the following diagram.

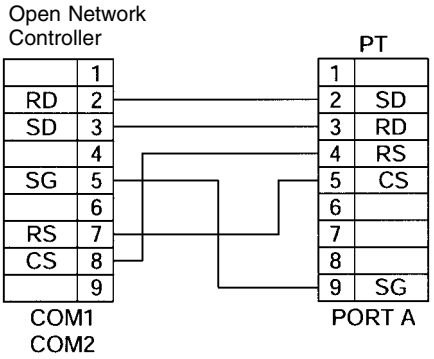

Editing Settings Files

The following three settings files must be edited when connecting a PT to the Open Network Controller.

/etc/FgwQnx/FgwQnx.ini
/etc/FgwQnx/FgwQnxRut.ini
/etc/FgwQnx/FgwQnxHsv.ini

The following section describes how to edit each of these files. Use vi or similar editor.

/etc/FgwQnx/FgwQnx.ini Settings

```
;=====================================================
; (c) Copyright OMRON Corporation 1999
;    All Rights Reserved
;=====================================
[FgwLibMgr]
;Priority=23
Qnx_pFlagMask=

;-----------------------------------------
; SERVICES under SCM
;-----------------------------------------
[Services]
Services= CPU_UNIT, ETN, RUT0, RUT1, Hsv0, Hsv1


[RouteTable]
LocalNetworks=(1,17)(2,21)(3,22)
RelayNetworks=




;-----------------------------------------
; COM
;-----------------------------------------
[COM]
COMs=3
COM1=RUT0
COM2=RUT1
COM3=HLK2
```

Add RUT and Hsv settings to the Services.
When connecting a PT to COM1 only, add RUT0 and Hsv0.
When connecting a PT to COM2 only, add RUT1 and Hsv1.
When connecting PTs to both COM1 and COM2, add RUT0, RUT1, Hsv0, and Hsv1.

Set the FINS network address in the routing tables.
When connecting a PT to COM1 only, set RUT0.
When connecting a PT to COM2 only, set RUT0.
When connecting PTs to both COM1 and COM2, set RUT0 and RUT1.

Set the RUT under COM.
When connecting a PT to COM1 only, set COM1=RUT0.
When connecting a PT to COM2 only, set COM2=RUT0.
When connecting PTs to both COM1 and COM2, set COM1=RUT0 and COM2=RUT1.

/etc/FgwQnx/FgwQnxRut.ini Settings

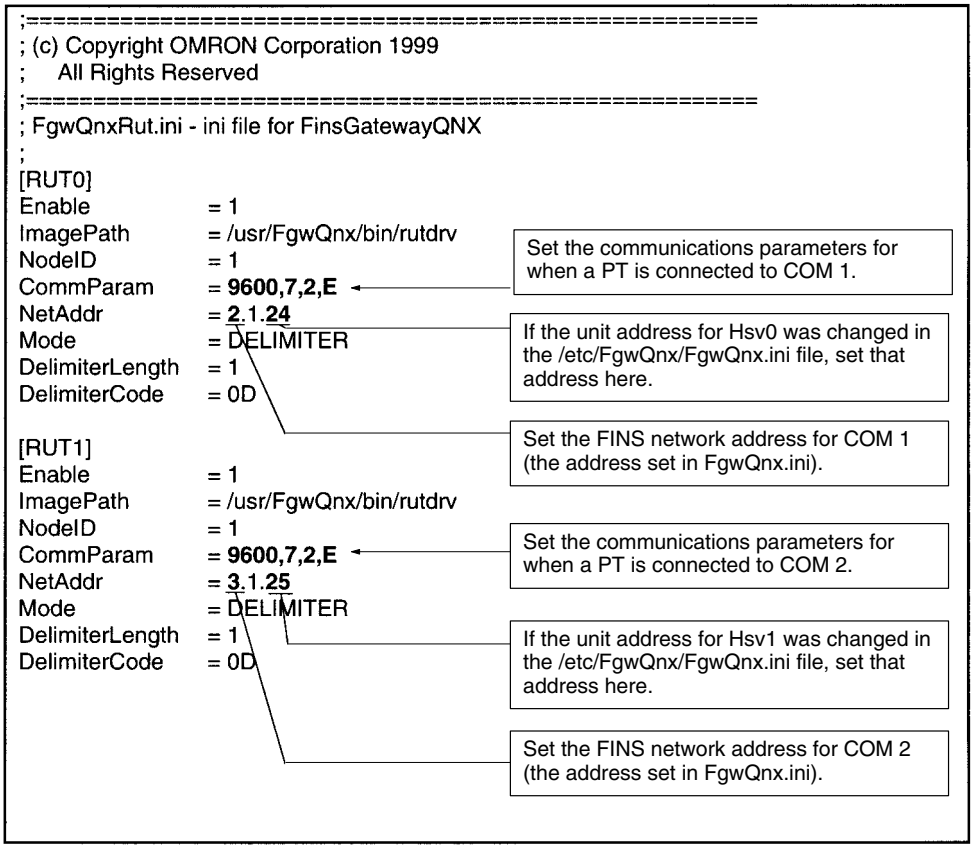

/etc/FgwQnx/FgwQnxHsv.ini Settings

Set the model codes to be returned to the PT from the Open Network Controller. Normally, this setting will not need to be changed, but if an existing program is to be used, the model code may need to be changed. Refer to the model codes listed below.

```
;=================================================
; (c) Copyright OMRON Corporation 1999
;     All Rights Reserved
;=================================================
; FgwQnxHsv.ini. For Jixyoui-Link unit,IP.
;
[Hsv0Unit]
MachineType     = 0x12   <-- Set the model code for COM1.
Name            = Hsv0

[Hsv1Unit]
MachineType     = 0x12   <-- Set the model code for COM2.
Name            = Hsv1
```

The model codes are listed in the following table.

Model code	Model
0x01	C250
0x02	C500
0x03	C120/C50
0x09	C250F
0x0A	C500F
0x0B	C120F
0x0E	C2000
0x10	C1000H
0x11	C2000H/CQM1/CPM1
0x12 (default)	C20H/C28H/C40H/C200H/C200HS
0x13	C1000HF
0x20	CV500
0x21	CV1000
0x22	CV2000
0x30	CS1
0x40	CVM1-CPU01
0x41	CVM1-CPU11
0x42	CVM1-CPU21

Restarting the Open Network Controller

Once the settings files have been edited and and the changes saved, restart the Open Network Controller to start up the PT connection service.

Appendix E
Diskspace Utility (Unit Version 1.1 or later)

Diskspace Utility

The diskspace utility has two functions: a function for monitoring the remaining disk space and a function for monitoring the size of the /tmp/syslog file.

The function to monitor remaining disk space periodically checks the available space on the internal disk, the Memory Card, or both and notifies the user by outputting error message PR0106: No Disk Space (A) Free Size = (B) if the remaining space falls below the specified size. “(A)” in the error message specifies the location of the disk (e.g., /hd), and “(B)” gives the remaining space in bytes.

The function to monitor the /tmp/syslog file size periodically checks the size of the /tmp/syslog file, changes the file name to /tmp/syslog.old when the specified size is reached, and creates a new /tmp/syslog file. This prevents the internal disk from becoming full, which would happen if the /tmp/syslog file was written to continuously. When the file name is changed to /tmp/syslog.old, the previous /tmp/syslog.old file (i.e., the file containing the previous contents of /tmp/syslog) will be deleted.

Precautions

- When the function to monitor remaining disk space has been enabled, the remaining space of the target disk will be checked at the specified period. The check processing for the remaining disk space searches the files on each disk to confirm the space on all disks, increasing the load on the ONC. Therefore, the software for performing high-speed disk access is affected.
- The function to monitor remaining disk space outputs an error message when the space available on the target disk is below the set value. This is only a warning, and actual measures to open up disk space, such as deleting unnecessary files, must be performed by the user.

Editing Setting Files

Setting the /etc/FgwQnx/diskspace.ini File (Unit Version 1.1 or Later)

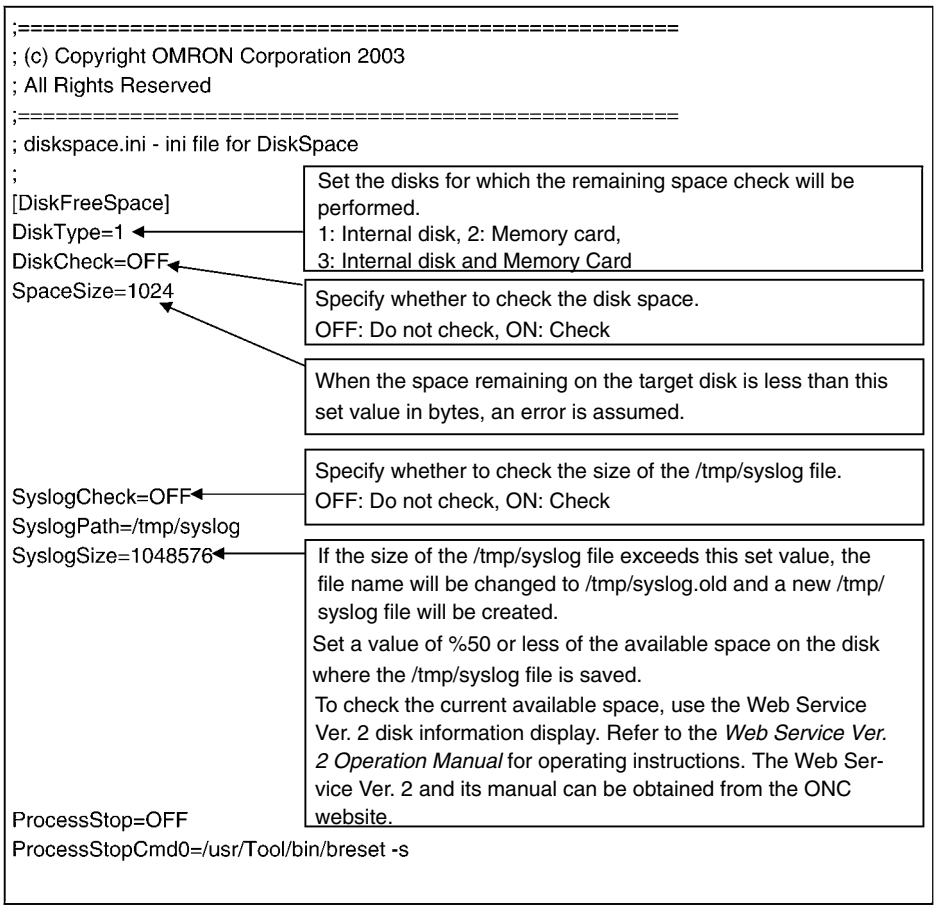

Setting the /usr/Tool/bin/onc_command File (Unit Version 1.1 or Later)

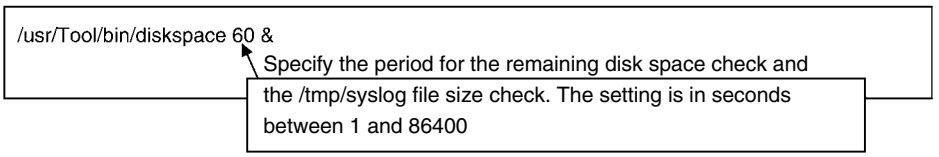

Note The Diskspace Setting Tool can be downloaded from the ONC website. Prepare a Memory Card and install the Diskspace Setting Tool to use it.

Index

Numbers

10Base-T cable
  connecting, 52
  connector pin arrangement, 227

7-segment displays, 24–31
  settings, 27

A–B

applications, precautions, xvi

back up, backing up settings, 67

backup battery, replacement, 229

battery, replacement, 229

bits, controlling, 156

C

CLK SETUP, 76

CLK_UNIT, 17–18
  FINS commands, 17, 162
  settings file, 60

clock
  reading, 124, 169
  setting, 125, 169

COM ports
  connector pin arrangements, 227
  settings, 74

COM1 port
  logging on via, 61
  settings, 26
  terminal connections, 41

commands for C-series PCs
  FILE MEMORY INDEX READ, 154
  FILE MEMORY READ, 155
  FILE MEMORY WRITE, 155

communications protocols, supported by HLK_UNIT, 13

components, 3
  component names and functions, 22–25

CompoWay/F, 13, 16
  connections, 44–46

configuration, system configuration, 10

connections, system configuration, 10

connectors, signal arrangements, 227

Controller Link Board, mounting, 28

Controller Link network, connecting with CLK_UNIT, 17

Controller Link NP, settings, 76, 96, 112

CPU_UNIT
  FINS commands, 11, 117–127
  functions, 11–12

D

DeviceNet
  connecting cables, 46–51
  connecting to network with DRM_UNIT, 16
  indicator displays, 211–215
  indicators, 25
  resetting DeviceNet hardware, 159
  scan list file, 60, 95, 110–111

DeviceNet NP, settings, 78, 109–110

dimensions, mounting dimensions, 32

DIN Track
  installation, 36–39
  Mounting Bracket, 6

DIP switch settings, 26

displays
  DeviceNet indicator displays, 211
  error displays, 196–197
  seven-segment display, 24

DM Area
  reading, 118, 132, 164
  writing, 119, 133, 165

DRM_UNIT, 16–17
  FINS commands, 17, 158–161
  settings, 90–94
  settings file, 60

E

EC Directives, xvii

end codes, 171–177

errors
  error IDs, 197–211
  error messages, 196–210

Ethernet, 103
  connector pin arrangement, 227
  making settings with SYSTEM SETUP menu, 73
  using, 63–66

Ethernet cables, connecting, 52

Ethernet NP, settings, 76, 108

ETN SETUP, 76

ETN_UNIT, 13
  FINS commands, 13, 128
  settings, 90
  settings file, 60

event memory, 12

Expansion Boards, mounting, 28–30

F

fatal error data, 152, 168

File Memory
  reading, 155
  reading index data, 154
  writing, 155

files, settings files, 60

FINS commands, 115–177
  addressable to CLK_UNIT, 17, 162
  addressable to CPU_UNIT, 11, 117–127
  addressable to DRM_UNIT, 17, 158
  addressable to ETN_UNIT, 13, 128–130
  addressable to HLK_UNIT, 131–157
  addressable to SYSMAC Board, 18
  addressable to SYSMAC_UNIT, 18, 162–170

FinsGateway, QNX settings, 103–108

FinsGateway SETUP, 74

Flash Cards, handling, 53–57

formatting, Flash Cards, 57

FTP transfers, transferring settings files, 82

G–H

ground, wiring the ground, 41

hardware components, 21

hardware configuration, 10

HLK SETUP, 80

HLK_UNIT, 13–16
  FINS commands, 14, 15, 131–157
  settings file, 60, 97, 113–114

Host Link, 13
  address tables, 98
  connections, 42
  Host Link NP settings, 113–114

host name, 84
  Ethernet setting, 73
  host IP addresses, 84

HyperTerminal, 61

I

indicators, 24–31
  DeviceNet, 25

installation, 7
  DIN Track, 36–39
  installing the Open Network Controller, 31–39
  mounting Expansion Boards, 28
  nodes, connection, 51
  of hardware components, 21
  precautions, xvi
  T-branch Taps, connection, 49
  Terminators, connection, 50

IP router, 84
  setting Ethernet addresses, 73

L

LED indicators, 24

logging onto the Open Network Controller, 61

login, 62, 66

M

memory areas
  reading, 118, 132, 164
  writing, 119, 133, 165

menus, ONC_wizard menus, 68–69

model numbers
  reading model numbers of Units, 124
  reading PC model number, 123, 128, 151, 160, 167, 170

Mounting Bracket, 5

multi-drop connections, 48

N

nodes, installation, connection, 51

noise, reducing noise, 41

nomenclature, 22–25

non-fatal error data, 152, 169

NP functions, 12–19

O

ONC_wizard, 66–81
  starting and exiting, 66

operating environment, precautions, xv

P

Parameter Areas
  clearing, 122
  reading, 120
  writing, 121

password
  changing, 63
  login, 62

PC
  changing to RUN mode, 149, 158, 166
  reading controller data, 123, 128, 151, 160, 167, 170

performance specifications, 225

power supply
  capacity, 40
  connecting, 39
  connector terminal arrangement, 228

precautions, xiii
  applications, xvi
  general, xiv
  operating environment, xv
  safety, xiv

Programmable Terminal
  connection service, 231, 235
  settings files, 232

R

RESOURCE SETUP, 74

response codes, 171–177

RS-232C ports, Host Link connections, 42

RS-422A ports
  CompoWay/F connections, 44
  Host Link connections, 42, 43

RS-485 ports, CompoWay/F connections, 45

RUT SETUP, 81

S

safety precautions. *See* precautions

SEKISUI SI-30A Adaptor, 45

serial communications protocols, supported by HLK_UNIT, 13

set up, 7

settings
  backing up, 67
  COM1 port, 26
  DIP switch, 26
  hardware settings, 21
  seven-segment display, 27
  software settings, 59–114
    file names, 60

software configuration, 11

specifications, 225

Startup Services, 103–108

subnet mask, 84
  Ethernet setting, 73

SYSMAC Board
  allocations in event memory, 101–102
  connecting with SYSMAC_UNIT, 18
  FINS commands, 18
  mounting, 28
  software settings, 77

SYSMAC SETUP, 77

SYSMAC WAY, 13
  connections, 42
  Host Link NP settings, 113–114

SYSMAC_UNIT, 18–19
  driver settings file, 100
  FINS commands, 18, 162–170
  settings file, 60, 99

system configuration, 10

SYSTEM SETUP, Ethernet settings, 73

T

T-branch Taps
  installation, connection, 49
  terminating, 50

T-branch tap connections, 49

Telnet, 61, 65

Terminators, installation, connection, 50

troubleshooting, 195

V–W

vi editor, making settings with vi editor, 82

wiring
  Ethernet cables, 52
  ground, 41
  multi-drop connections, 48
  power supply, 39
  T-branch tap connections, 49

Revision History

A manual revision code appears as a suffix to the catalog number on the front cover of the manual.

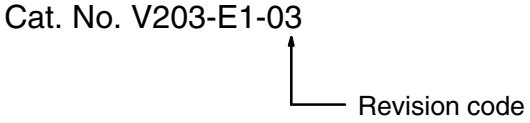

The following table outlines the changes made to the manual during each revision. Page numbers refer to the previous version.

Revision code	Date	Revised content
1	October 1999	Original production
2	September 2000	Corrections and revisions added throughout to add the ITNC-EIS01-CST and ITNC-EIX01-CST.
03	October 2004	Revisions throughout the manual to add information on the version upgrade to version 1.1, add and change safety precautions, make corrections, and add other relevant information.

Refer to the following Web site for the most recent information on Open Network Controllers:
http://www.plcsoft.ne.jp/it/onc/english/index.html

OMRON Corporation
FA Systems Division H.Q.
66 Matsumoto
Mishima-city, Shizuoka 411-8511
Japan
Tel: (81)55-977-9181/Fax: (81)55-977-9045

Regional Headquarters

OMRON EUROPE B.V.
Wegalaan 67-69, NL-2132 JD Hoofddorp
The Netherlands
Tel: (31)2356-81-300/Fax: (31)2356-81-388

OMRON ELECTRONICS LLC
1 East Commerce Drive, Schaumburg, IL 60173
U.S.A.
Tel: (1)847-843-7900/Fax: (1)847-843-8568

OMRON ASIA PACIFIC PTE. LTD.
83 Clemenceau Avenue,
#11-01, UE Square,
Singapore 239920
Tel: (65)6835-3011/Fax: (65)6835-2711

OMRON

Authorized Distributor:

Cat. No. V203-E1-03

Note: Specifications subject to change without notice.

Printed in Japan

This manual is printed on 100% recycled paper.